BRYAN TEXAS UTILITIES

BTU

THE DIFFERENCE IS **YOU**

SERVICE ENTRANCE REQUIREMENTS MANUAL

10.1th Edition
2025

TABLE OF CONTENTS

BTU General Policies and Procedures 3

SECTION 1: Temporary Construction 5
- Temporary Overhead Fed Meter Pole 6
- Temporary Underground Fed Meter Pole 7
- BTU Equipment with Secondary Voltage Available 8
- BTU Equipment without Secondary Voltage Available 9

SECTION 2: Overhead Service Entrances 10
- Service Entrance Meter Pole 11
- Meter Loop Not Penetrating a Roof (Wall Mounted) 12
- Meter Loop Penetrating Roof (Wall Mounted) 13
- Service Mast Guying 14
- Three-Phase 480 Volt Self-Contained Meter Loop 15

SECTION 3: Underground Service Entrances 17
- Early Pipe Program 17
- Underground Service Entrance Wall Mounted 19
- Three-phase Underground Installations 23

SECTION 4: CT Metered Installations 26
- Typical Current Transformer (CT) Installations for Overhead & Underground Services Metered on the Building 26
- Transocket 27
- Typical CT Installation for Underground Services Metered on the Transformer 28

SECTION 5: Multiple Meter Installations 29
- Meter and Service Location Labeling 30
- Manufactured Meter Packs 32
- Meters Fed Through Wireways 33

SECTION 6: Clearances 34
- Clearances from Buildings Where Service Mast Does Not Penetrate the Roof 34
- Clearances Where Service Mast Penetrates the Roof 35
- Clearances to Ground for Overhead Service Conductors 36
- Pad Mounted Transformer Clearance 37
- Swimming Pool Clearances 38

SECTION 7: Charts, Tables and BTU Specifications 39
- Voltages Offered By BTU 40
- Maximum Padmount Transformer Sizes 40
- Color Identification Codes for Conductors at Service Entrance 40
- Service Entrance Ratings and Conduit Charts for Underground Service Risers 41
- Service Entrance Ratings, Wire and Conduit Charts for Overhead Service Risers 42
- Maximum Overhead Span Lengths-Service Cable 43
- Secondary Conduit Installation 44
- Primary & Secondary Conduit Installation 46

SECTION 8: Motors and Controllers 47
- Motor Starting Limitations 46
- Starting Current Limits for Single-Phase Motors 48

Starting Current Limits for Three-phase Motors 49
Motor Starting and Control Equipment 50
Critical Service Motor Operation..... 50
Motor Protection 50

SECTION 9: Power Delivery 51
Utility Grade Power vs. Premium Power..... 51
Power Quality 51

Frequently Called Numbers 54

Preface

The Customer's installation of the service entrance equipment and conductors shall conform to Bryan Texas Utilities' ("BTU") Service Entrance Requirements Manual. BTU will inspect the service entrance to the first means of disconnect for conformity.

BTU does not, however, assume any duty of inspecting the Customer's wiring, apparatus, devices, machinery or equipment. It is particularly understood that the Customer assumes full responsibility for electric energy furnished to him/her at and past the point of delivery, described as being the point where the electric energy first leaves the line provided, owned and maintained by BTU and enters the line provided, owned and maintained by the Customer. Furthermore, Customer shall protect and save harmless BTU from all claims for injuries and damages to persons and property occurring upon the premises of the Customer except where it is shown that the negligence of BTU or its agent or agents was the sole proximate cause of such injury or damage.

For the Customer's safety and equipment efficiency, the Customer's wiring shall conform to the following requirements:

1) The latest edition of the National Electrical Code and the National Electrical Safety Code.
2) All federal, state, county and municipal requirements in force at the time installation is made.
3) BTU's Service Entrance Requirements Manual.

BTU recommends that the Customer obtain the assistance of a qualified Texas licensed electrician.

****Click the link below to register or log into BTU's Citizenserve portal where Customers can initiate the process of getting power to a new residential or commercial site.**

BTU Citizenserve Online Portal

****QR code below to register or log into BTU's Citizenserve portal where Customers can initiate the process of getting power to a new residential or commercial site.**

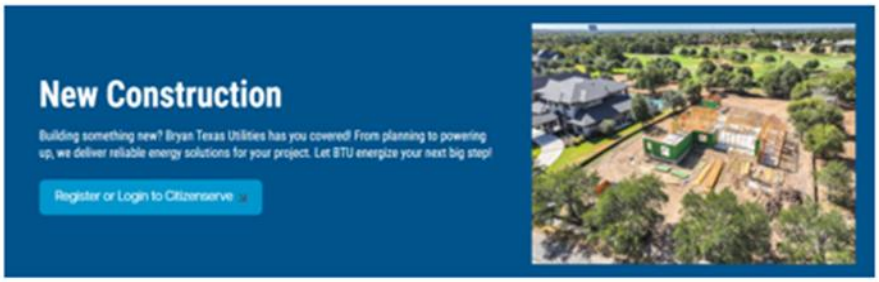

SCAN QR CODE TO ACCESS CITIZENSERVE PORTAL

Major Revisions to the BTU Service Entrance Manual

Pg 3 **BTU General Policies and Procedures**

- BTU issued material can only be picked up from the warehouse with a job number (Conduit, Aluminum Risers, Elbows, Brackets, Meter Sockets, etc).
- All ***permanent commercial*** applications shall be labeled with an address. Labels shall be engraved phenolic nameplates with an all-weather adhesive backing. Labels shall be black with white letters. Labels must be a ***minimum*** of 1.00" in Height and 2.50" in Width with engraved letters that are a ***minimum*** 1/4" high. The label shall identify the physical address, including the apartment, townhouse, office, suite, city and state. **The label must also include voltage, amps, available fault current, and date calculations were performed.**

Pg 11 **Section 2, Service Entrance Meter Poles**

- All ***permanent*** applications shall be labeled with an address. Labels shall be engraved phenolic nameplates with an all-weather adhesive backing. Labels shall be black with white letters. Labels must be a ***minimum*** of 1.00" in Height and 2.50" in Width with engraved letters that are a ***minimum*** 1/4" high. The label shall identify the physical address, including the city and state.

Pg 19,20 **Section 3, Underground Service Entrance Wall Mounted BTU installed conduit**
Underground Service Entrance Wall Mounted customer installed conduit

- 24" slip riser must be provided and installed by the Customer. (See notes 1-7 for details).

Pg 21 **Section 3, Service Entrance Meter Racks**

- All ***permanent*** applications shall be labeled with an address. Labels shall be engraved phenolic nameplates with an all-weather adhesive backing. Labels shall be black with white letters. Labels must be a ***minimum*** of 1.00" in Height and 2.50" in Width with engraved letters that are a ***minimum*** 1/4" high. The label shall identify the physical address, including the city and state.

Pg 26 **Section 4, CT Meter Installations**

- **Field Marking.** Service equipment at other than dwelling units shall be legibly marked in the field with the maximum available fault current. The field marking(s) shall include the date the fault-current calculation was performed and be of sufficient durability to withstand the environment involved. The calculation shall be documented and made available to those authorized to, design, install, maintain, inspect, or operate the system.

Pg 29 **Section 5, Multiple Meter Installations**

- Meter and Service Location Labeling (See examples of address labels).
- Gutter must have a 3/8" factory or field installed weatherproof locking hasp that will accept a BTU lock. One (1) locking hasp is required every 3'on the gutter.

Pg 41 **Section 7, Service Entrance Ratings and Conduit Charts for Underground Service Risers**

- Schedule 80 electrical PVC risers will be accepted on single phase and three phase underground commercial services.

BTU General Policies and Procedures

1. For service voltages offered by BTU See Section 7.

2. Service install orders requiring only the installation of an electric meter are typically worked within 3-5 business days from the time BTU receives the order. However, if any type of construction is needed the service request shall go through the standard scheduling process, which typically takes 7-10 business days after any necessary utility locates have been verified. The scheduling process timeline does not begin until the Customer has mounted an approved meter loop, signed the Damage Waiver, executed necessary easements, and has paid their Contribution In Aid of Construction ("CIAC"), which is their contribution towards the construction cost of their project. The Customer shall have cleared all easements of trees, brush and any construction debris. The Customer shall notify BTU Line Design when ready for service and BTU personnel will field verify that the work has been completed by the Customer. All installations must be in compliance with the requirements in this manual.

3. For services required within a developed subdivision, BTU ensures (through the development process) that a power source is made available to each lot within that subdivision. Particular care needs to be given to the location of that power source. **It is expected the Builder and/or Electrician will locate their metering point on the side of their structure where the power source is readily accessible.** In the event the metering point is not located on the proper side of a structure, additional CIAC may be required from the Customer to cover costs necessary to relocate their power source to conform to BTU's maximum service length. Alternately, at the Customer's expense the meter and a sub-panel may be relocated to the power source side.

4. BTU will furnish a standard issue single meter socket, transocket, instrument transformer enclosure, current transformer(s), and potential transformer(s) as necessary for all ***permanent*** installations within the BTU service area. BTU issued material can only be picked up from the warehouse with a job number (Conduit, Aluminum Risers, Elbows, Brackets, Meter Sockets, etc).

5. BTU does not furnish meter packs, meter pedestals or meter banks for multiple occupancies and must approve such enclosures prior to installation.

6. BTU meter sockets may only be used as a raceway for service entrance conductors including panel circuits. Branch circuits are not allowed in the BTU meter socket.

7. **Any Customer provided sockets must be approved in writing by BTU prior to installation.** If written authorization is not obtained, the meter socket will not be allowed for use. BTU does not allow privately owned meter loops or any other non-approved equipment to be mounted on BTU owned poles, structures or facilities.

8. For all installations greater than 200 Amps, prior to service being extended or determination of any CIAC amount, an electric load analysis must be provided by the Customer or their contractor to BTU Line Design with enough detail to adequately size BTU's electric facilities.

9. For public safety and operating measures, BTU requires pad mounted transformers to be located at least five (5) feet from any driveway, road, street, building, structure, equipment, shrubs or trees. If an existing pad mounted transformer needs paint or repair, BTU Line Design should be contacted to inspect the condition of the unit.

10. On all underground installations, BTU will allow a shared ditch line with dry utilities only (Cable TV, Fiber). BTU does not allow any type of public or private wet utilities (Sewer, Water, Gas) to be installed in the same ditch with any BTU owned electrical line.

11. BTU requires a fused/breaker disconnect on all services. The first means of disconnect shall be within ten (10) feet of the meter socket, and load wires from the meter socket shall be installed in conduit to the first means of disconnect.

12. All ***permanent commercial*** applications shall be labeled with an address. Labels shall be engraved phenolic nameplates with an all-weather adhesive backing. Labels shall be black with white letters. Labels must be a ***minimum*** of 1.00" in Height and 2.50" in Width with engraved letters that are a ***minimum*** 1/4" high. The label shall identify the physical address, including the apartment, townhouse, office, suite, city and state. **The label must also include voltage, amps, available fault current, and date calculations were performed.**

13. BTU requires four (4) feet of clearance from the front of and one (1) foot to each side of meter sockets, disconnects, panels, current transformer (CT)/potential transformer (PT) enclosures or cabinets.

14. BTU Damage Waiver must be completed and returned to BTU prior to scheduling of any type of installation (conduit, wire, pole or equipment) in BTU's service territory

15. For clarification of any or all parts of this manual or information regarding a service requirement not covered by this manual, contact BTU Line Design at NewConstruction@btutilities.com or by phone at 979-821-5770.

SECTION 1: Temporary Construction

General

For all temporary meter poles over 200 amps and all three-phase temporary meter poles, the Customer shall contact BTU Line Design at (979) 821-5770.

*****BTU does not supply meter sockets for temporary applications*****

Prior to setting an electric meter, BTU will inspect all meter loops for conformity to this manual.

BTU reserves the right to charge trip fees when multiple trips are made to the job site necessitated by installations not conforming to this manual.

Temporary Overhead Fed Meter Pole

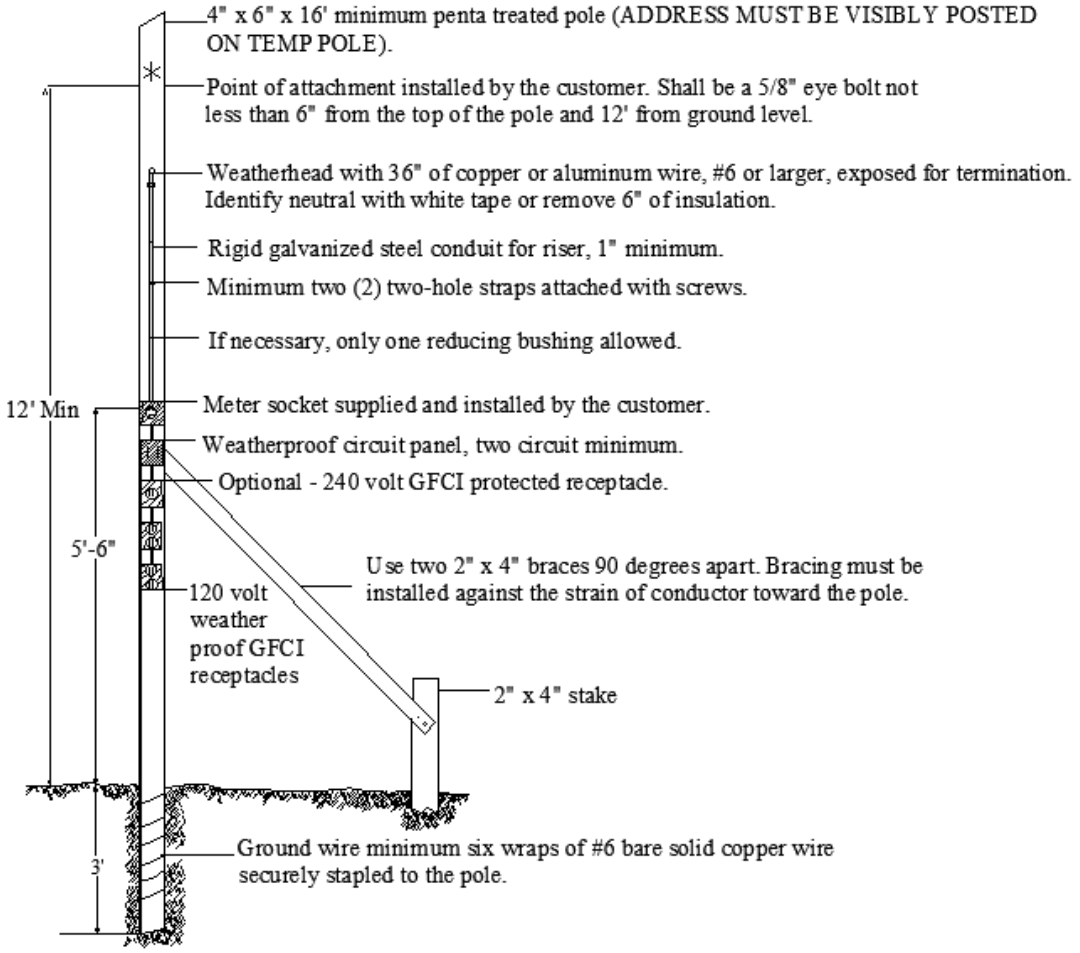

*Min. clearances will apply. See Section 6.

Temporary pole shall be installed within 50' of a BTU pole where 120/240V secondary voltage is available.

Prior to setting an electric meter, BTU will inspect all installations for conformity to this manual.

BTU reserves the right to charge trip fees when multiple trips are made to the job site necessitated by installations not conforming to this manual.

Temporary Underground Fed Meter Pole

4" x 4" x 10' minimum penta treated pole (ADDRESS MUST BE VISIBLY POSTED ON TEMP POLE)

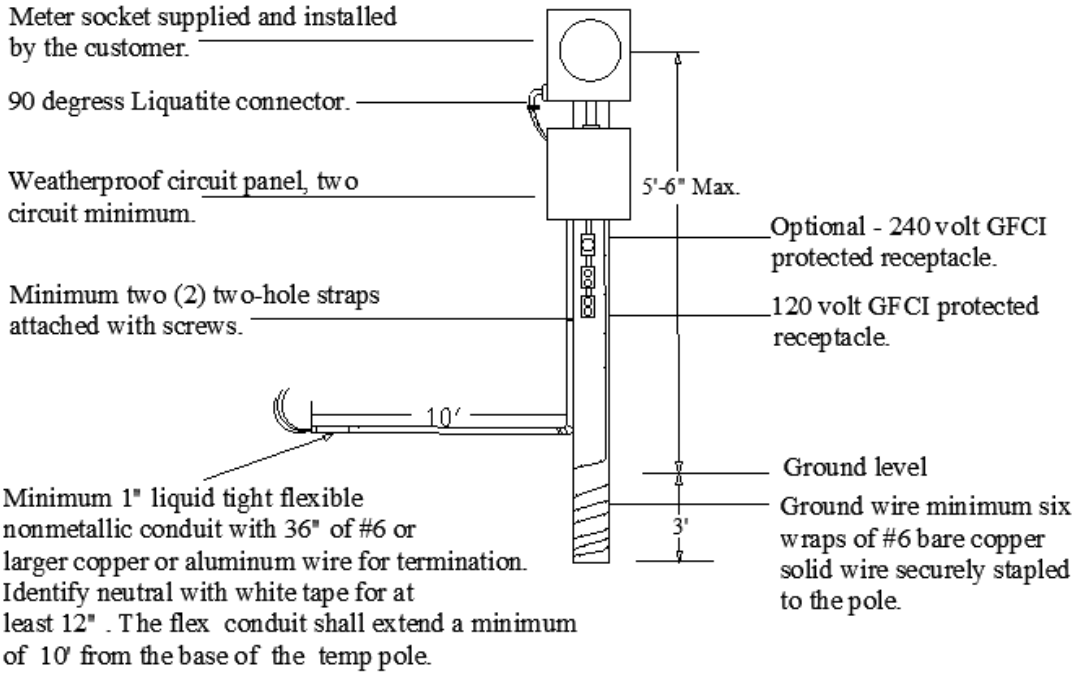

Temporary pole shall be installed within 5' of the right front side of a padmount transformer or within 5' of an underground secondary pedestal. If BTU equipment is further than 3' from property line contact BTU Line Design before installing temp pole. See Section 1 for transformer and pedestal diagram.

*** Exceptions shall be decided on a case by case basis by BTU Line Design ***

Prior to setting an electric meter, BTU will inspect all installations for conformity to this manual.

BTU reserves the right to charge trip fees when multiple trips are made to the job site necessitated by installations not conforming to this manual.

BTU Equipment with Secondary Voltage Available

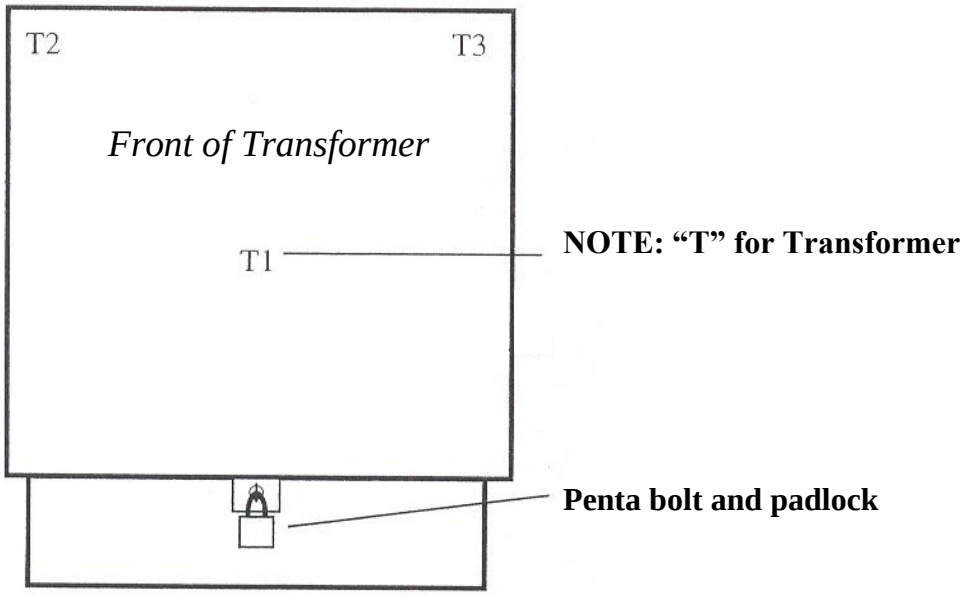

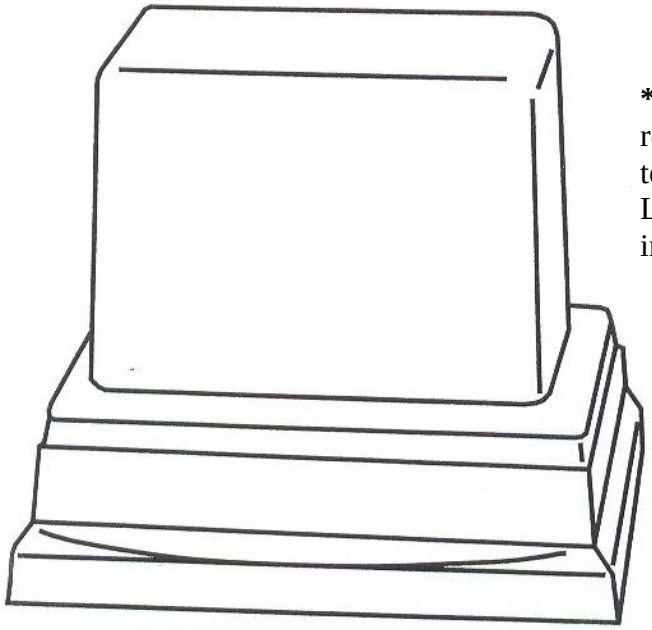

Secondary Power Pedestal.

***<u>NOTE</u>:** If you have any questions regarding whether BTU's equipment is able to provide secondary voltage, contact BTU Line Design at (979) 821-5770 prior to installing your temporary pole.

BTU Equipment <u>without</u> Secondary Voltage Available

NOTE: DO NOT INSTALL A TEMPORARY POLE NEXT TO THESE TYPE CABINETS

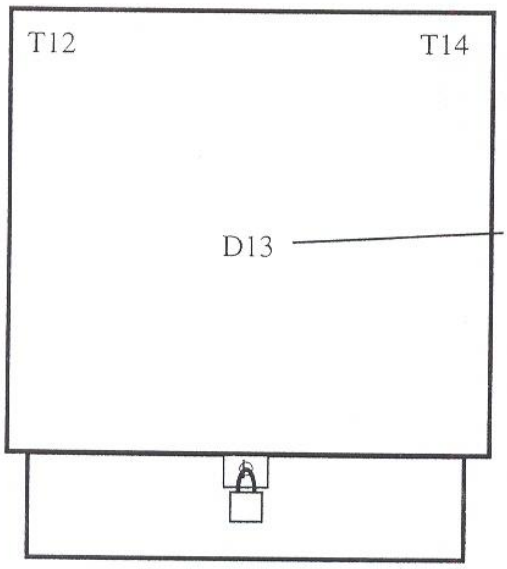

NOTE: "D" for "Dummy Can"
Used as a BTU junction cabinet – <u>Not</u> a source for temporary power.
Contains Primary Voltage Only.

Junction Cabinet

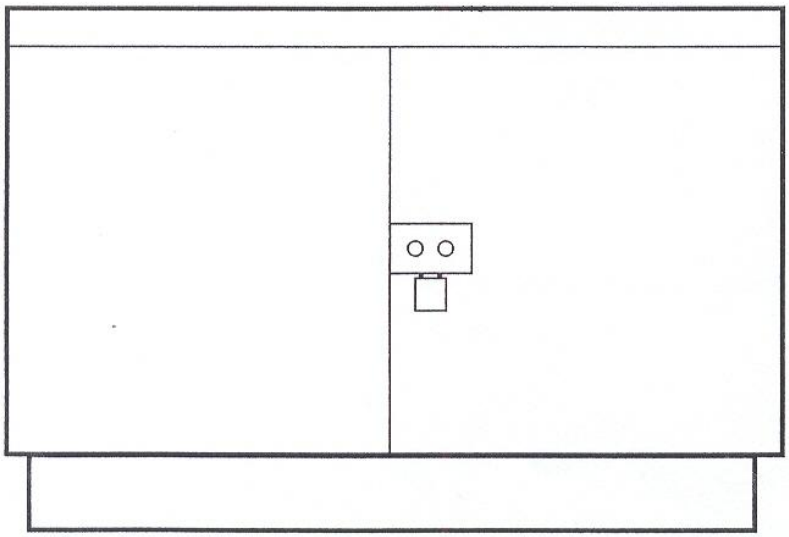

__ Contains Primary Voltage Only

Switch Cabinet

SECTION 2: Overhead Service Entrances

General

Meter sockets are furnished by BTU and installed by the Customer. **BTU allows one meter socket per service.** They may be picked up at the BTU Warehouse located at 2301 Fountain Ave, Bldg 240, Bryan, Texas. **A job number is required to pick up a meter socket.**

All risers shall have a minimum of two (2) two-hole straps secured to wall with screws (nails are not acceptable).

All weatherheads shall have 36" of wire protruding for termination. All neutrals shall be identified with white tape or by removing 6" of insulation.

The service entrance weatherhead and meter must be on the same face, wall or plane of the structure.

Prior to setting an electric meter, BTU will inspect all meter loops and points of attachment for conformity to this manual.

BTU requires a continuous neutral from the weather head through the meter can to the first means of disconnect.

BTU reserves the right to charge trip fees when multiple trips are made to the job site necessitated by installations not conforming to this manual.

Service Entrance Meter Pole

All mobile homes and portable buildings will be required to utilize a permanent meter pole for overhead installations and a free-standing meter rack for all underground installations.

Meter pole shall be 18' minimum (Not to exceed 25') round class 7 creosote or penta treated pole with a minimum 4" diameter top.

Point of attachment shall be installed by the customer 6" from top of the pole using a $\frac{5}{8}$" eyebolt.

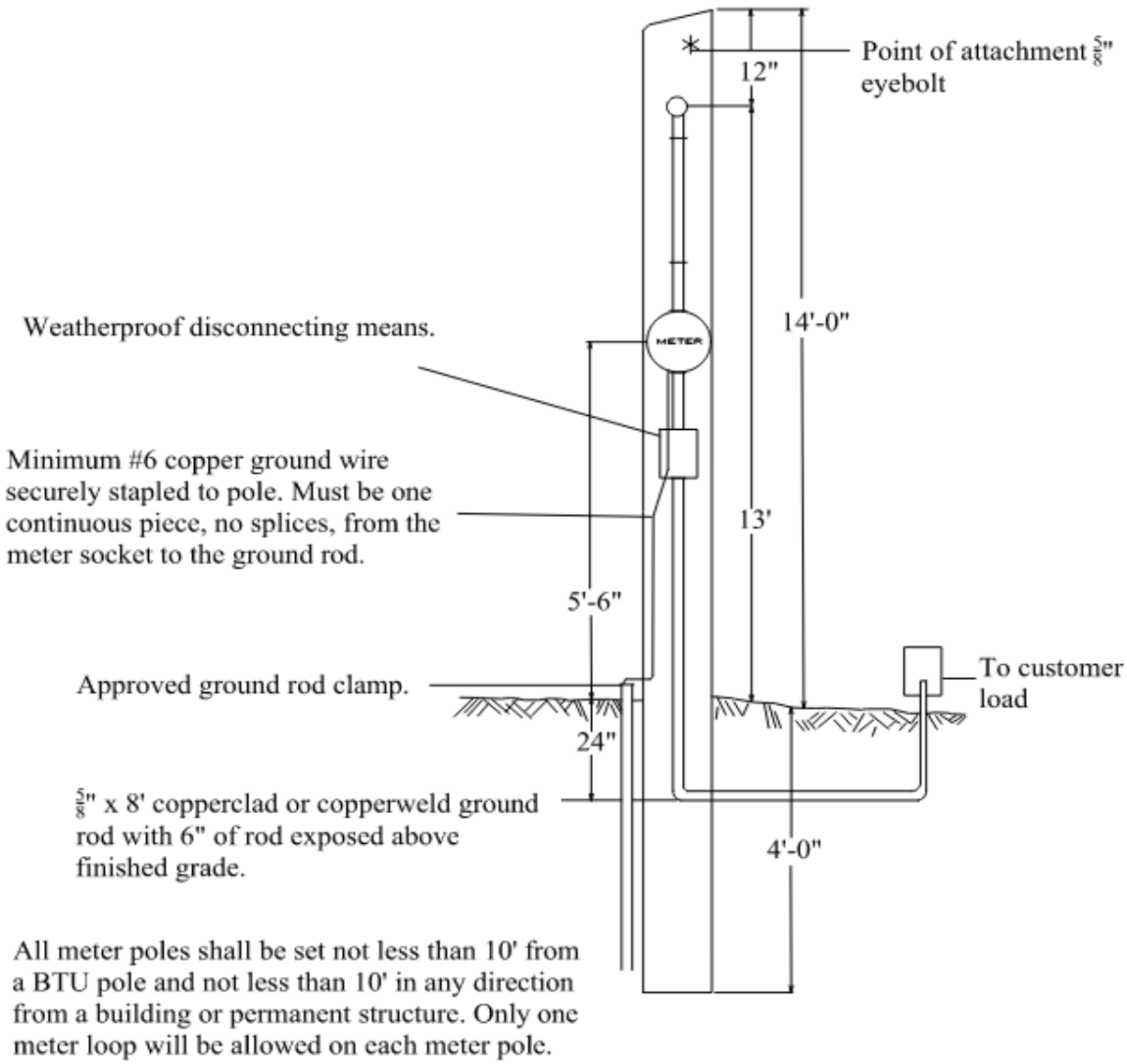

All ***permanent*** applications shall be labeled with an address. Labels shall be engraved phenolic nameplates with an all-weather adhesive backing. Labels shall be black with white letters. Labels must be a ***minimum*** of 1.00” in Height and 2.50” in Width with engraved letters that are a ***minimum*** 1/4" high. The label shall identify the physical address, including the city and state.

If necessary, on meter pole, guy and anchor will be installed by customer. See Section 7, Maximum Overhead Span Lengths-Service Cable.

Meter Loop Not Penetrating a Roof (Wall Mounted)

Customer shall furnish and install the point of attachment sufficient to withstand a minimum pull of **500 pounds**.
It shall be not more than 25’ above ground, not more than 18” from weatherhead and not less than 12’ above finished grade.
Ceramic screw in wire holders and house knobs, will not be accepted on new installations.

Service drop clearances shall comply with this manual.

Service entrance disconnect and location shall conform to the latest version of the NEC and all local ordinances.

Minimum #6 copper ground wire securely attached to wall. Must be one continuous piece, no splices, from the meter socket, through the ground bus, to the ground rod.

Approved ground rod clamp.

5/8” x 8’ copperclad or copperweld ground rod with 6” of rod exposed above finish grade.

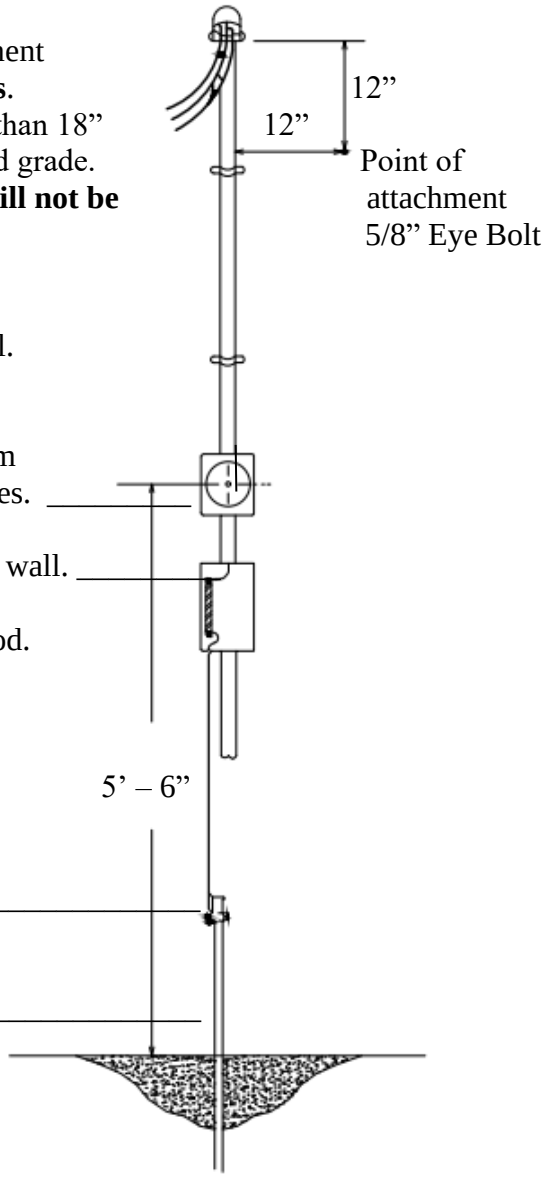

Meter Loop Penetrating Roof (Wall Mounted)

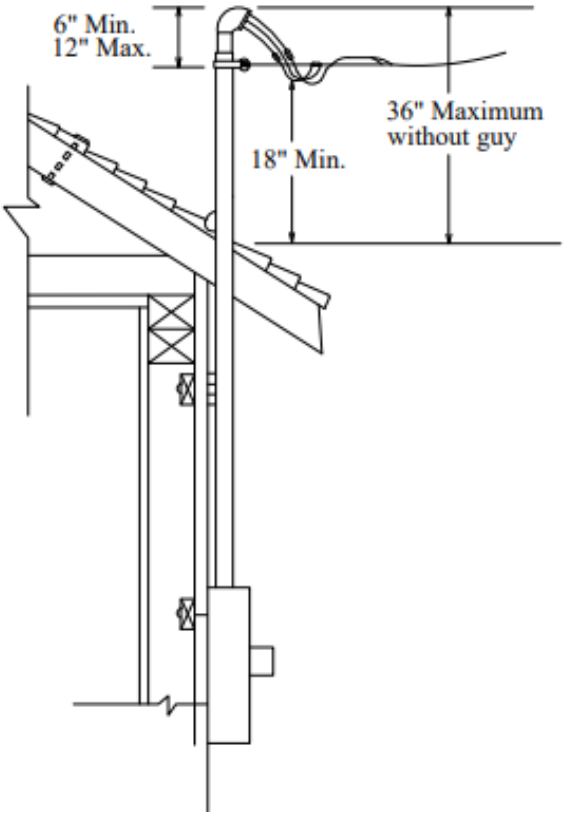

Service entrance equipment shall be installed in a manner such that the route of service drop or other conductors allows for or maintains three feet of horizontal free air space from walls, doors, or roof overhang of the structure. It shall also be located in a manner to prevent the service conductors from crossing over any building or structure.

Service mast shall be rigid conduit (See Section 7 - Service Entrance Ratings, Wire and Conduit Charts for Overhead Service Risers). All risers must be supported with a minimum of two (2) two-hole straps. Only BTU service drop conductors are allowed to be attached to and supported by the service mast.

If height of service mast exceeds 36” above roof, service mast guying is required.

In order to maintain ground clearances, the point of attachment shall be no less than 12’ above finished grade.

Service drop clearances shall comply with this manual.

Minimum #6 copper ground wire securely attached to wall. Must be one continuous piece, no splices, from the meter socket through the ground bus, to the ground rod.

The ground rod shall be a 5/8” x 8’ copperclad or copperweld with 6” of rod exposed above finished grade.

All overhead services that exceed 50’ from the transformer to the meter loop will require a lift pole.

Service Mast Guying

(To be installed by the Customer)

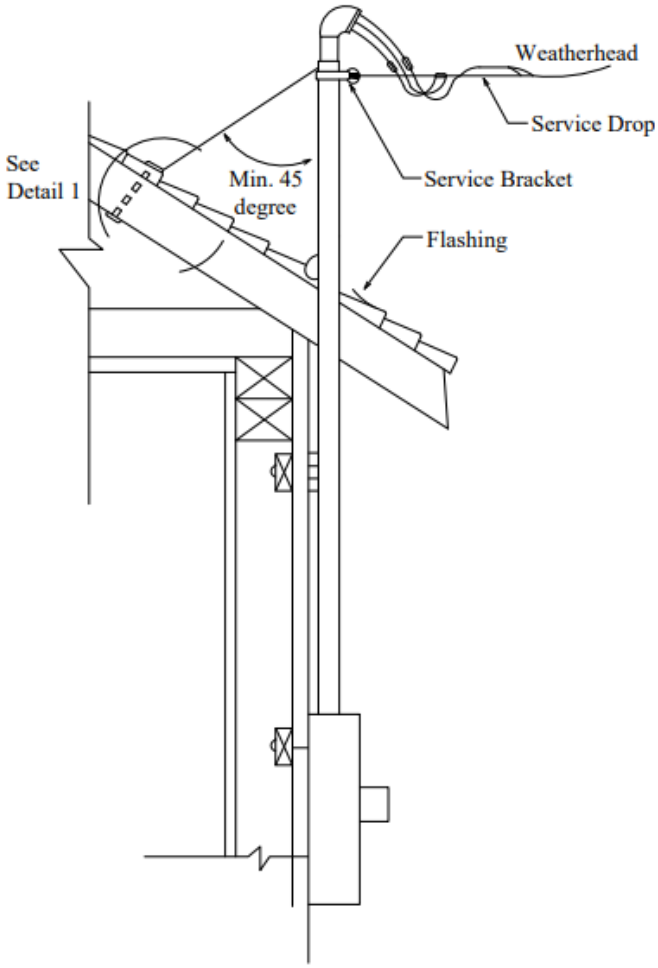

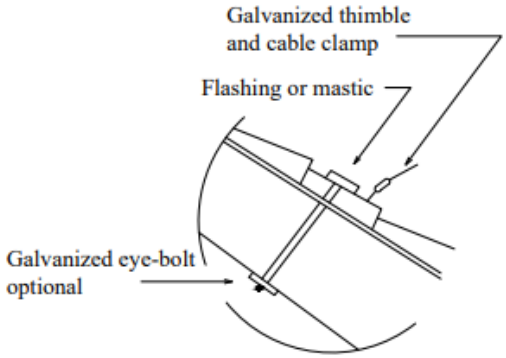

Detail 1

Three-Phase 480 Volt Self-Contained Meter Loop

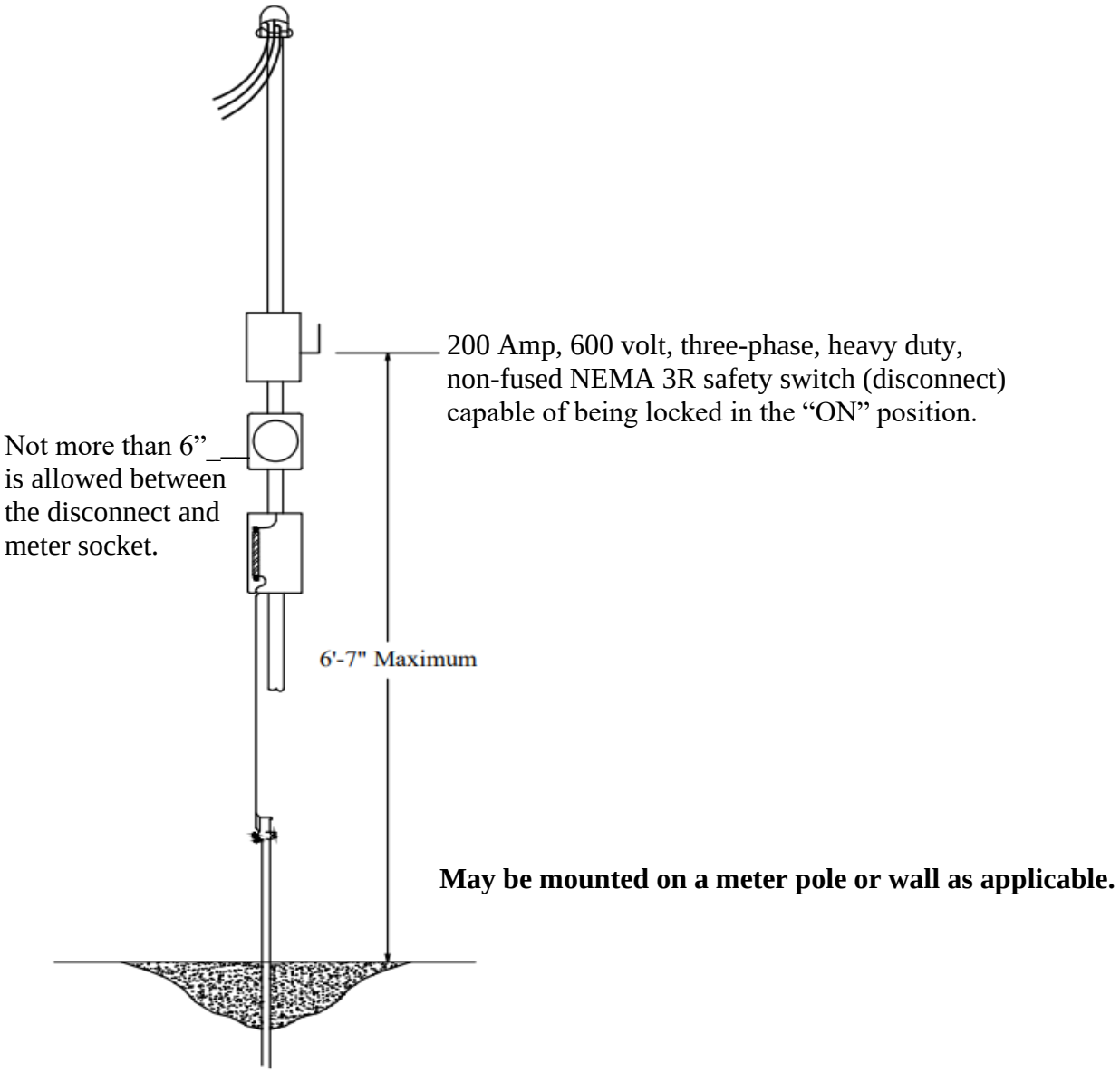

All ***permanent*** commercial applications shall be labeled with an address. Labels shall be engraved phenolic nameplates with an all-weather adhesive backing. Labels shall be black with white letters. Labels must be a ***minimum*** of 1.00" in Height and 2.50" in Width with engraved letters that are a ***minimum*** 1/4" high. The label shall identify the physical address, including the apartment, townhouse, office, suite, city and state. The label must also include voltage, amps, available fault current, and date calculations were performed.

BTU Policy on A Base Meter Service Entrances

If the service is disconnected at the request of the Customer to perform any work associated with any of the following tasks, the service entrance must be rebuilt to meet current BTU Service Entrance Requirements.

- Increasing capacity or load
- Upgrading any wiring or equipment that will facilitate any future additional capacity or load
- Relocating or rebuilding the service entrance

If the service is disconnected for any of the following or similar reasons, and the meter base and/or meter base adapter are damaged, the service entrance must be rebuilt to meet current BTU Service Entrance Requirements.

- Tree falling on service wire
- Truck or vehicle pulling down service wire
- Burning or arcing wires, connections, meter lugs, etc.

If the service is disconnected for any other reason, and the service entrance remains safe and electrically sound as determined by City of Bryan if located within the city limits of Bryan, by City of College Station if located within the city limits of College Station, or by BTU personnel if located outside the city limits, then it can be reconnected in its present form.

SECTION 3: Underground Service Entrances

General

In underground fed meter sockets, the Customer shall terminate their load wires in the bottom lugs, and BTU's line side wires will terminate in the top lugs.

Prior to setting an electric meter, BTU will inspect all meter loops for conformity to this manual.

BTU reserves the right to charge trip fees when multiple trips are made to the job site necessitated by installations not conforming to this manual.

Early Pipe Program

(Only applicable to residential Customers within the City limits of Bryan and College Station)

BTU's Early Pipe Program is designed to offer the Builder the opportunity to have underground service conduit installed prior to installation of the meter socket. The BTU Damage Waiver must be completed and returned to BTU prior to scheduling of early pipe or cable installation.

All debris along or adjacent to the conduit route must be removed giving BTU crews adequate working room for conduit installation. Further, all private underground utilities must be located. BTU will not be liable for damage to sod or to private facilities not properly located. Until the final electric service is installed, the Builder will be responsible for repairing conduit installed as part of the Early Pipe Program.

In the event the slab is mismarked, the meter socket location is changed, or the Electrician installs the conduit in the wrong location, it is the Electrician's responsibility to relocate the conduit to the correct location and ensure the riser and elbow are installed in an acceptable manner. The riser must be plumb from the horizontal run in the ground to the meter socket.

<u>Option A</u>
The location where the Electrician chooses BTU to turn up the secondary conduit must be prominently marked on the slab. BTU will leave sufficient conduit protruding from the ground to be used as a riser. If the Electrician mounts the meter socket prior to BTU installing the conduit, it will no longer be considered Early Pipe and the Electrician shall then install the slip joint before BTU will connect to and/or extend service.

Option B

The Customer may choose to install their own secondary conduit per BTU specifications. BTU will provide enough PVC conduit necessary for the installation of the secondary conductors. The conduit may be picked up at BTU's warehouse located at 2301 Fountain Ave, Bldg 240, Bryan Texas. The Electrician will need to provide the job number to receive the conduit. It is suggested that the Customer contact BTU warehouse personnel by phone at (979) 821-5933 to arrange conduit pickup.

Both the Early Pipe Program and service installation are subject to BTU's typical scheduling process.

It will be the responsibility of the Builder/Electrician/Customer to protect the conduit by all means necessary from any debris or breakage. BTU does not take ownership of the conduit until the secondary conductors have been installed and terminations have been completed.

The BTU Damage Waiver must be completed and returned to BTU prior to scheduling of any type of installation (conduit, wire, pole or equipment) in BTU's service territory.

Underground Service Entrance Wall Mounted

BTU INSTALLED CONDUIT, UNDERGROUND SERVICE ENTRANCE

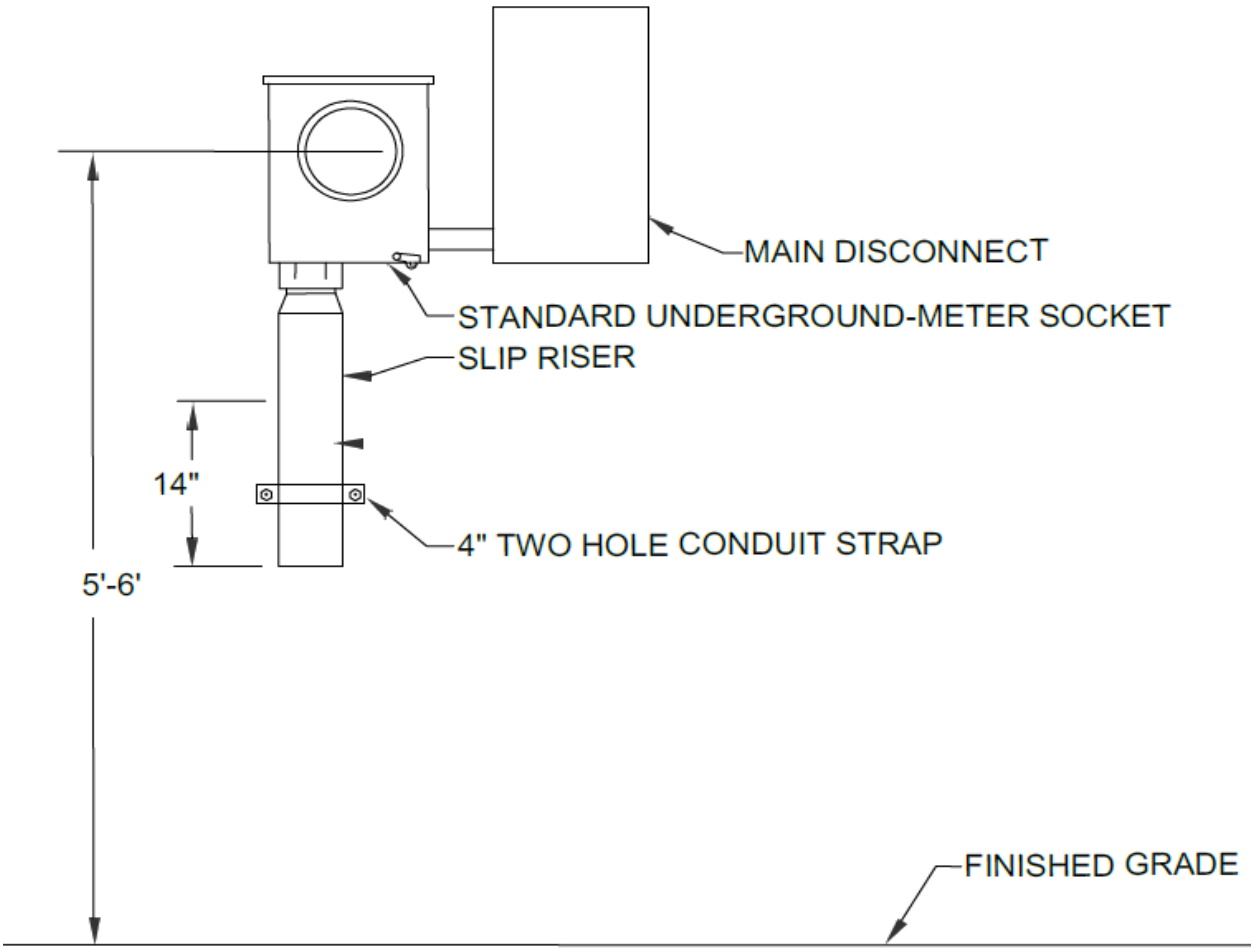

1. Only rigid connections will be allowed between meter socket and main disconnect panel.
2. The riser and meter socket shall be mounted externally on an exterior finished wall.
3. There shall be no more than a 1½" gap between the riser and the exterior finished wall.
4. A 24" slip riser must be installed. This will allow the lower conduit to be inserted 14" into the slip riser.
5. All slip risers will be furnished and installed by the Customer.
6. Two-hole clamp shall be furnished and installed by the Customer as shown in diagram.
7. The wall mounted underground service entrance is not permitted for use on mobile homes, all underground services for mobile homes must be mounted on a free-standing meter rack.

Refer to Section 7 for service entrance ratings and conduit size chart.

Underground Service Entrance Wall Mounted

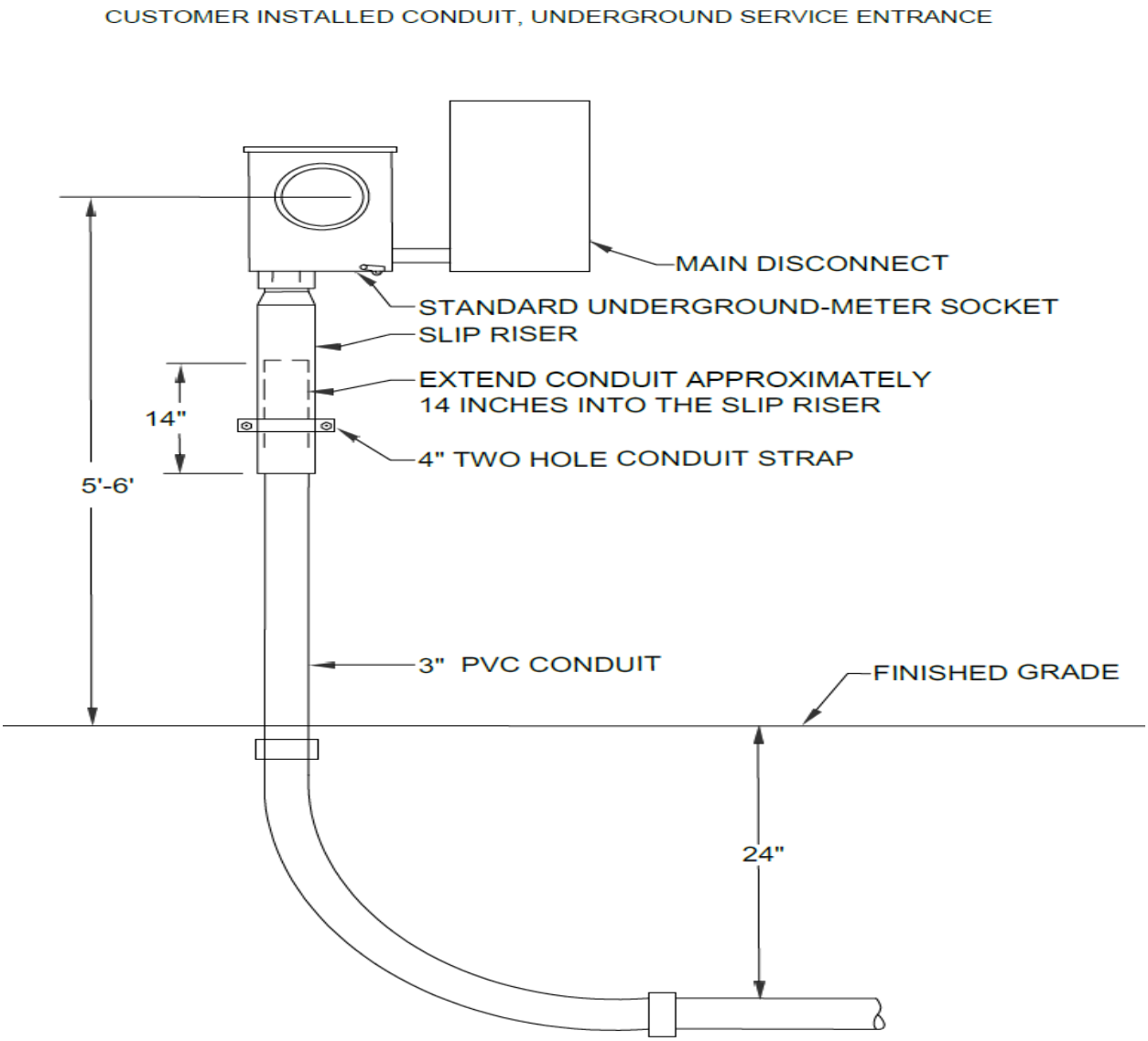

1. Only rigid connections will be allowed between meter socket and main disconnect panel.
2. The riser and meter socket shall be mounted externally on an exterior finished wall.
3. There shall be no more than a 1½" gap between the riser and the exterior finished wall.
4. A 24" slip riser must be installed. This will allow the lower conduit to be inserted 14" into the slip riser.
5. Lower service riser must be a continuous run from the ground line into the slip riser. All slip risers will be furnished and installed by the Customer.
6. Two-hole clamp shall be furnished and installed by the Customer as shown in diagram.
7. No bends or couplings are allowed above finished grade.
8. The wall mounted underground service entrance is not permitted for use on mobile homes, all underground services for mobile homes must be mounted on a free-standing meter rack.

Refer to Section 7 for service entrance ratings and conduit size chart.

Free Standing Underground Meter Rack

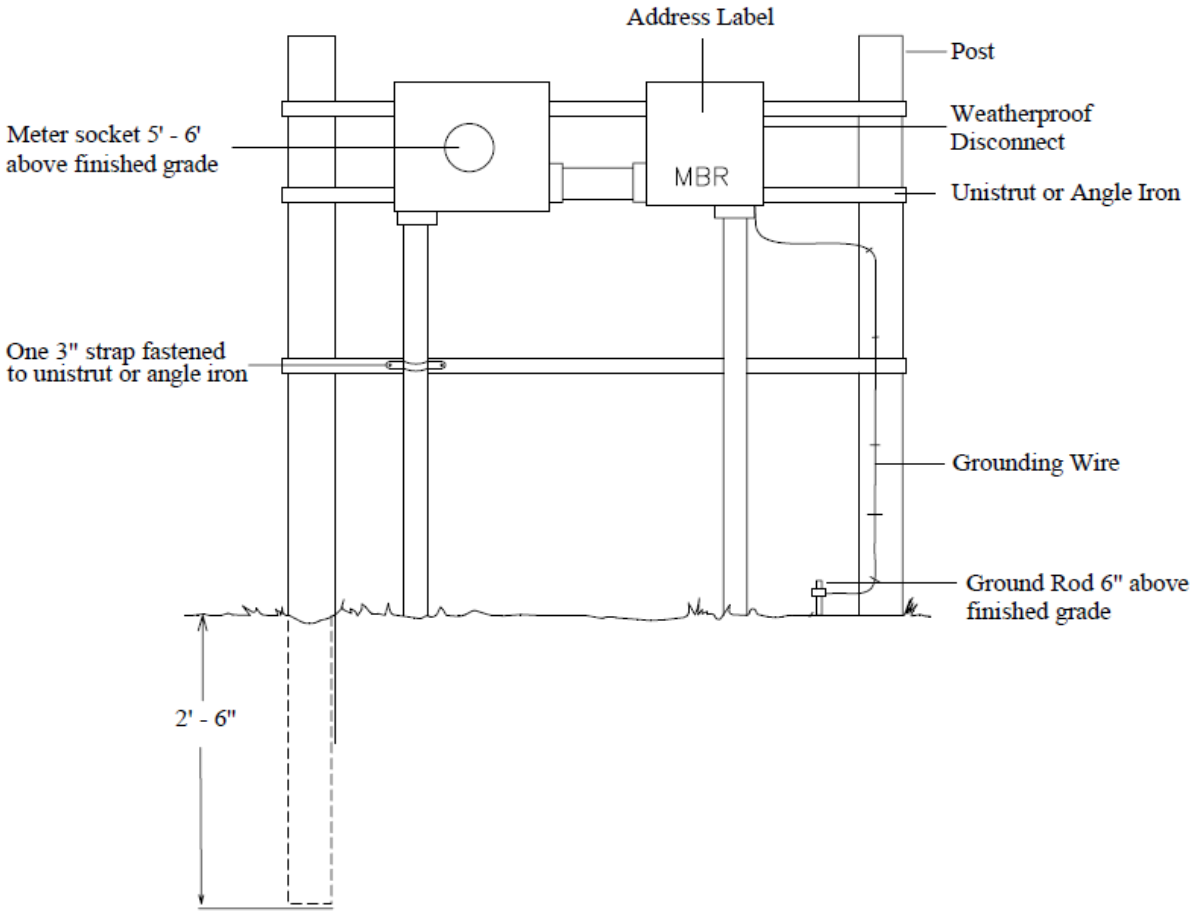

Free Standing Underground Meter Rack

1. Posts may be a minimum of either 4” square treated, 4” round treated or 2” galvanized pipe.
2. Brackets may be 1” Unistrut or 1” angle iron capable of bolting meter socket and main breaker. Rack shall be plumb and level with no nails used in construction.
3. Ground wire shall be minimum #6 copper securely attached to the post and connected with an approved ground rod clamp to a 5/8” x 8’ copperweld or copperclad ground rod with 6” of rod exposed above finished grade.
4. Three-Phase 480-volt self-contained meter racks must be constructed with a 200-amp, 600 volt, three-phase, heavy duty, non-fused NEMA 3R safety switch capable of being locked in the “ON” position located on the line side of the meter.
5. The ***permanent*** address label shall be engraved phenolic nameplate with an all-weather adhesive backing. Labels shall be black with white letters. Labels must be a ***minimum*** of 1.00” in Height and 2.50” in Width with engraved letters that are a ***minimum*** 1/4" high. The label shall identify the physical address, including the apartment, townhouse, office, suite, city and state.

Customer Installed Conduit

The Customer may choose to install their own conduit; however, BTU reserves the right to install and terminate all conductors from the power source to the Customer's meter socket.

In a platted underground subdivision, developer installs conduit stub outs from the padmount transformers and pedestals for future service installations. The Customer shall connect their installed conduit to these stub outs. For verification and location of a stub out, contact BTU Line Design.

BTU does not allow Customer access inside any of BTU's electrical equipment. If a Customer is installing their conduit where a stub out does not exist, BTU Line Design will mark a location for the Customer to stop their conduit adjacent to an existing, or future, power source. BTU will then install the stub out and tie in to the Customer's conduit.

Before acceptance of Customer installed conduit, the installation must conform to BTU's installation specifications. The conduit installation shall be inspected by an authorized BTU representative before the ditch is backfilled. **Failure to coordinate conduit inspection may result in the Customer incurring delays and additional expenses related to the Customer reopening the ditch line to allow for proper inspection**.

All conduit installed must be minimum schedule 40 electrical rated PVC. Contact BTU Line Design for proper size. Red 6" warning tape is required for all primary conduit installations. BTU will provide the warning tape upon inspection of conduit.

Three-phase Underground Installations

BTU will install, own, operate, and maintain the primary underground cable, the distribution transformer, the electric meter, and the secondary connections in the padmount transformer.

The Customer shall install, own, and maintain a concrete transformer pad constructed to BTU specifications shown below. If the transformer is located in an area where it may be subject to physical damage (e.g. from vehicular traffic), BTU may require the Customer to install, own, and maintain an approved means of protection.

Further, if the transformer serves a single Customer, the Customer shall install, own, and maintain all secondary cables and conduits from the transformer to the service entrance. It is the Customer's responsibility to coordinate with BTU and provide the quantity and size of secondary conductors that will be installed (example: 500 MCM copper, four (4) conductors per phase) well in advance of construction. The maximum size secondary conductor which may be installed in a 3-phase transformer is 750 MCM. The maximum number of secondary conductors per phase allowable in a three-phase padmount transformer shall be as follows:

Transformer Size	Maximum # of Conductors per Phase	Maximum # of Conduits
150kVA to 500kVA	6	6
750kVA or larger	10	10

The combined area of all secondary conduits (initial and future) shall not exceed 60% of the available secondary "window" area as shown on the applicable padmount transformer pad detail specification. For example, a transformer pad with a secondary window of 18"x24" has an area of 432 in². A 6" schedule 40 PVC conduit with an OD of 6-5/8" has an area of approximately 34.5 in². The maximum number of 6" PVC schedule 40 conduits allowed would be calculated as (432x0.6)/34.5 or 7.5. This equates to <u>no more than</u> 7 conduits. **At no time will the secondary conduits or conductors exceed the limits shown in the table above nor will transformers be up-sized to merely allow for additional conduits or conductors.**

The phasing and proper conductor length will be the responsibility of the Customer regardless of who installs the terminals or terminates the secondary cables to the transformer connectors.

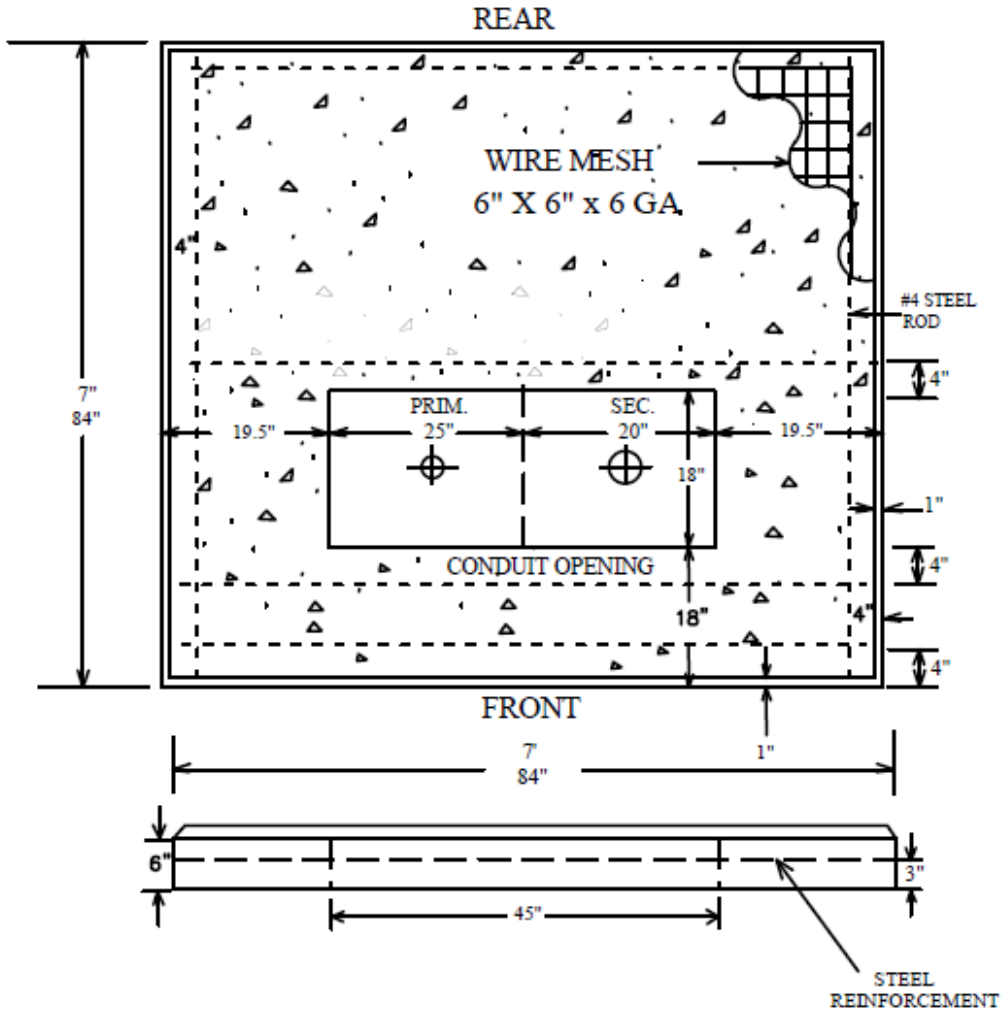

PRIMARY
CONDUIT ALIGNMENT

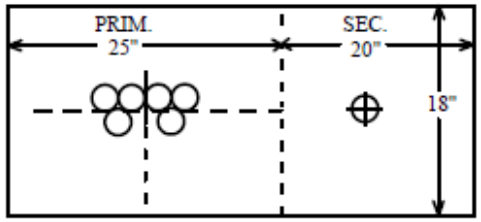

NOTES:

1. Concrete shall be min. 3000 lbs test.
2. Reinforced slab with 6"X6"x6 gauge steel wire mesh and #4 steel rods as shown.
3. Pad shall be poured in place in one continuous pour.
4. Pad shall be level with a 1" champher around the edge.
5. Conduit opening will be formed to keep it free of concrete.
6. After conduit is installed, conduit opening shall be filled with sand to within 2" of slab top. All conduit shall be centered as shown in diagram.
7. Before pour is made, the slab form and conduit arrangement must be inspected and approved by a representative of BTU Line Design. (979)821-5770.
8. Pad must cure 72 hours min. before transformer is set.
9. Contractor shall install elbows as required below (Type and size to be identified by BTU Line Design).
10. See Section 6 for transformer clearances.

Elbows: _____ _____ _____ _____
Qty. Size Type Radius

Secondary Elbows: _____ _____ _____ _____
Qty. Size Type Radius

THREE PHASE XFMR PAD 75 TO 500 KVA
BRYAN TEXAS UTILITIES
NAME:
INVESTIGATION NO.:
ISSUED: BRYAN, TEXAS

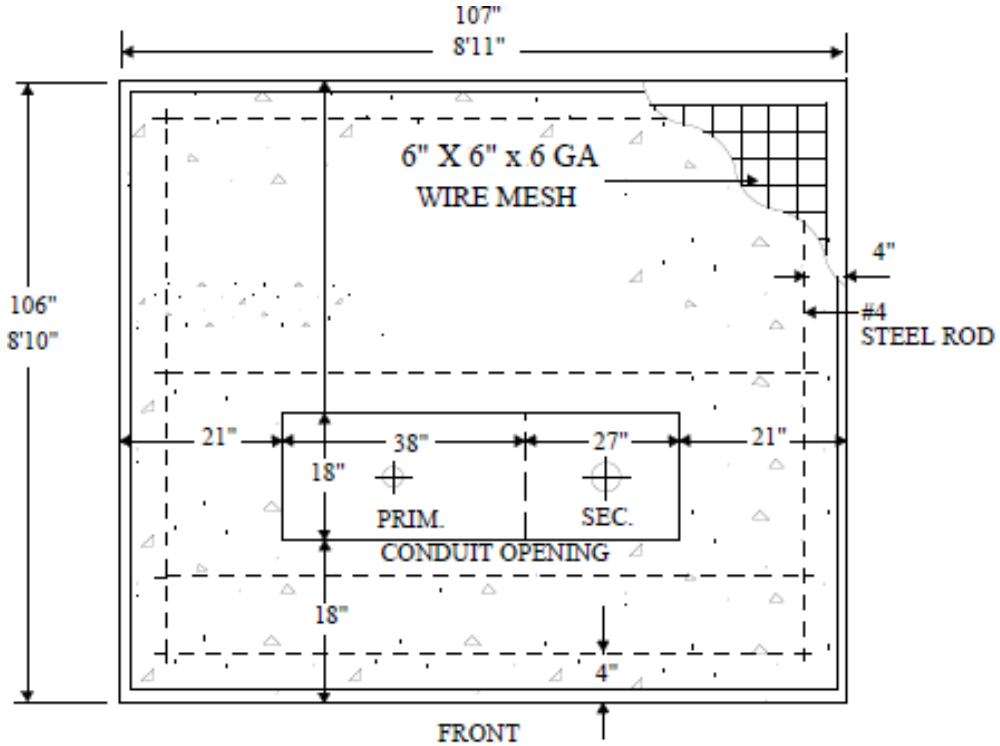

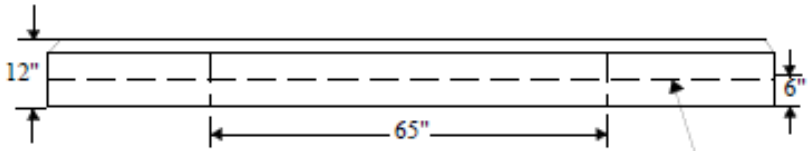

STEEL REINFORCEMENT

CONDUIT ALIGNMENT

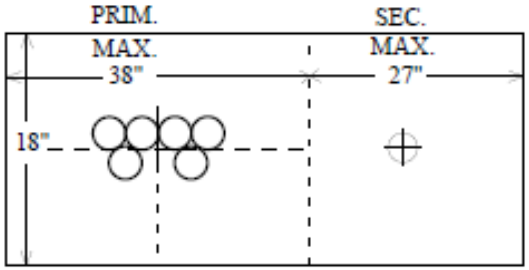

NOTES:

1. Concrete shall be min. 3000 lbs test.
2. Reinforced slab with 6"X6"x6 gauge steel wire mesh and #4 steel rods as shown.
3. Pad shall be poured in place in one continuous pour.
4. Pad shall be level with a 1" champher around the edge.
5. Conduit opening will be formed to keep it free of concrete.
6. After conduit is installed, conduit opening shall be filled with sand to within 2" of slab top. All conduit shall be centered as shown in diagram.
7. Before pour is made, the slab form and conduit arrangement must be inspected and approved by a representative of BTU Line Design. (979)821-5770.
8. Pad must cure 72 hours min. before transformer is set.
9. Contractor shall install elbows as required below (Type and size to be identified by BTU Line Design).
10. See Section 6 for transformer clearances.

Primary Elbows: _____ _____ _____ _____
Qty. Size Type Radius

Secondary Elbows: _____ _____ _____ _____
Qty. Size Type Radius

TRANSFORMER FOUNDATION 750kVA AND LARGER	
BRYAN TEXAS UTILITIES	
NAME:	
INVESTIGATION NO.:	
ISSUED:	BRYAN, TEXAS

SECTION 4: CT Metered Installations

Typical Current Transformer (CT) Installations for Overhead & Underground Services Metered on the Building

Transocket

The transocket is a single enclosure that combines the meter socket and current transformer cabinet to provide more cost-effective metering. The units as supplied by BTU are limited to actual loads of no more than 600 amps as determined by BTU. Mounting height to the centerline of the meter is 5½ feet above finished grade. The neutral and high leg conductors inside the transocket must be labeled in an acceptable manner. If parallel phase conductors are used, the phases should be labeled inside the transocket. The transocket dimensions are 25” W x 50” H x 13.50” D.

The transocket must have a permanent address label. It shall be engraved phenolic nameplate with an all-weather adhesive backing. Labels shall be black with white letters. Labels must be a ***minimum*** of 1.00” in Height and 2.50” in Width with engraved letters that are a ***minimum*** 1/4" high. The label shall identify the physical address, including the apartment, townhouse, office, suite, city and state. The label must also include voltage, amps, available fault current, and date calculations were performed.

NEC Code Language: 110.24 Available Fault Current.

Field Marking. Service equipment at other than dwelling units shall be legibly marked in the field with the maximum available fault current. The field marking(s) shall include the date the fault-current calculation was performed and be of sufficient durability to withstand the environment involved. The calculation shall be documented and made available to those authorized to, design, install, maintain, inspect, or operate the system.

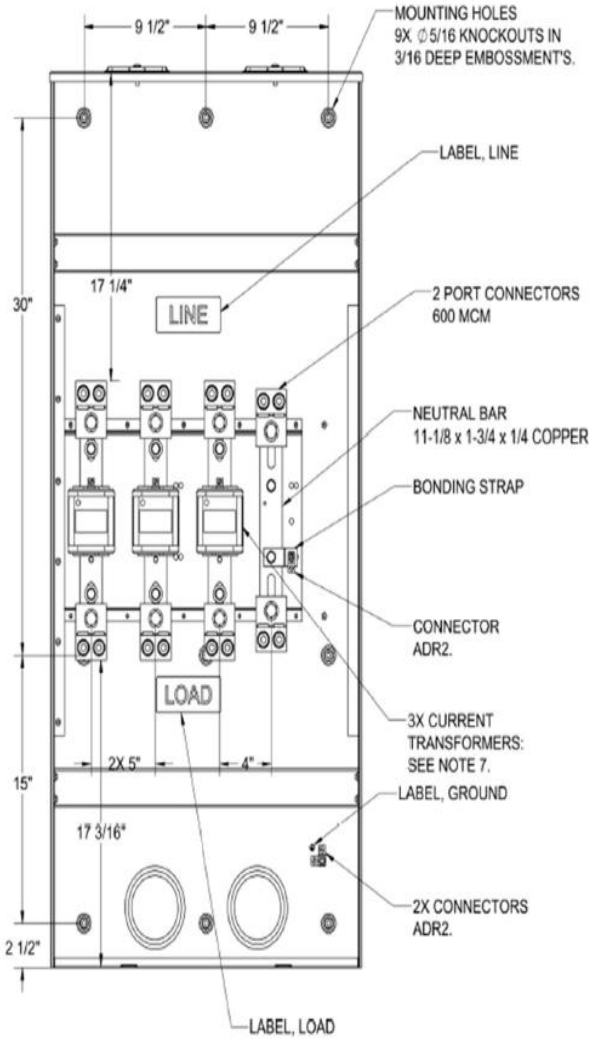

THREE PHASE

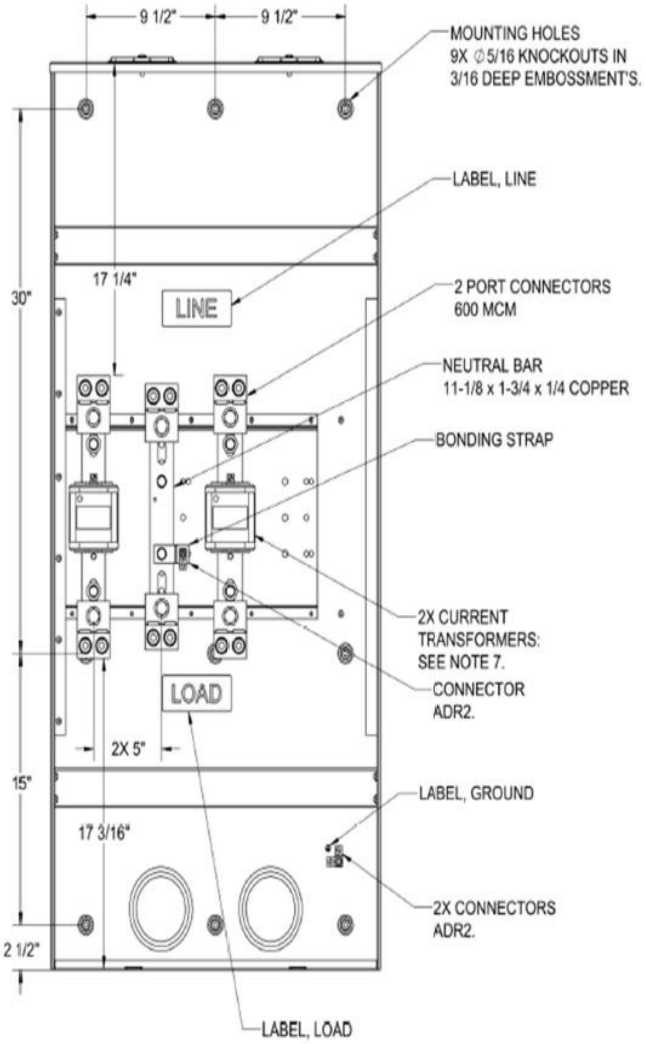

SINGLE PHASE

TRANSOCKET EXAMPLE

Typical CT Installation for Underground Services Metered on the Transformer

For three-phase pad mounted transformer installations where only one metering point will be served, BTU will install and maintain all metering equipment on the transformer.

1. The Customer and BTU Line Design shall agree on the transformer location prior to installation. **All transformers shall be located where BTU has 24-hour truck access from a paved surface for maintenance purposes.**

2. It is the Customer's responsibility to form and pour the transformer pad according to BTU provided specifications. According to the agreed upon design, the Customer shall also furnish and install all conduit stub outs according to BTU's conduit installation specifications.

3. It is the Customer's responsibility to furnish, install and maintain all conduit and conductor from the transformer to their load center. BTU will terminate the Customer's conductor in the transformer.

4. When ready for service conductor installation and termination the Customer shall contact BTU Line Design, and an appointment will be made to allow access inside the transformer.

5. On all three-phase underground installations the Customer shall supply BTU Line Design with a detailed load analysis and shall agree on all conduit and conductor size for the appropriate load.

6. For public safety and operating measures, BTU has a minimum distance the transformer must be from a building or structure. See Section 6 for clearances.

SECTION 5: Multiple Meter Installations

Meter and Service Location Labeling

Where there is more than one meter required to serve a location, then each meter socket and corresponding disconnect shall be permanently labeled by the Customer to identify the specific address associated with each meter.

The ***permanent*** address label shall be engraved phenolic nameplate with an all-weather adhesive backing. Labels shall be black with white letters. Labels must be a ***minimum*** of 1.00” in Height and 2.50” in Width with engraved letters that are a ***minimum*** 1/4" high. The label shall identify the physical address, including the apartment, townhouse, office, suite, city and state.

INK PEN/MARKERS AND ADHESIVE STICKERS OF ANY TYPE ARE NOT ACCEPTABLE.

EXAMPLES OF ADDRESS LABELS

2.50"W x 1.00"H

Underground Duplex Installation

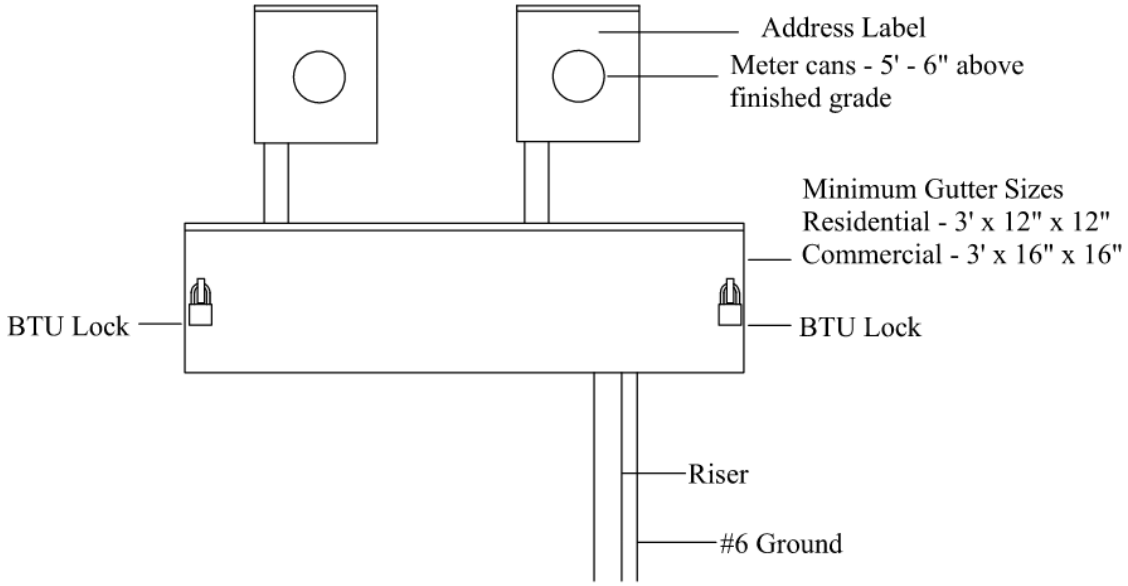

Electrician shall furnish the gutter and power distribution blocks (floating, insulated type power distribution blocks required).

The ***permanent*** address label shall be engraved phenolic nameplate with an all-weather adhesive backing. Labels shall be black with white letters. Labels must be a ***minimum*** of 1.00” in Height and 2.50” in Width with engraved letters that are a ***minimum*** 1/4" high. The label shall identify the physical address, including the apartment, townhouse, office, suite, city and state.

Water proof hubs are required on the top entry of the gutter. Gutters shall be installed within 12” of the meter-cans. Gutter and meter sockets shall be grounded with a minimum #6 copper ground wire attached to the ground rod with an approved ground clamp.

Gutter must have a 3/8” factory or field installed weatherproof locking hasp that will accept a BTU lock. One (1) locking hasp is required every 3’on the gutter.

DRILLING THE GUTTER AS A MEANS TO INSTALL A LOCK IS NOT ACCEPTABLE.

Overhead Duplex Installation

1. If the Customer chooses to install two separate meter loops to feed a duplex the risers should be installed within three (3) feet of each other with the point of attachment installed between the two. The Customer shall install the point of attachment and it shall be an eye bolt anchored to the frame of the structure strong enough to hold the strain of the service conductor. BTU will install one service conductor to feed both meter loops. Each meter loop shall conform to the appropriate section of this manual.

2. If the Customer chooses to feed a duplex through a wireway, a minimum 16” x 16” x 3’ gutter must be installed. The gutter and meter socket shall be grounded with a minimum #6 copper ground wire attached to the ground rod with an approved ground rod clamp. The gutter must have two 3/8” factory or field installed weatherproof locking hasp that will accept a BTU lock. One (1) locking hasp is required every 3’on the gutter**.**

3. A ***permanent*** address label is required. Label shall be engraved phenolic nameplate with an all-weather adhesive backing. Labels shall be black with white letters. Labels must be a ***minimum*** of 1.00” in Height and 2.50” in Width with engraved letters that are a ***minimum*** 1/4" high. The label shall identify the physical address, including the apartment, townhouse, office, suite, city and state.

DRILLING AS A MEANS TO INSTALL A LOCKING DEVICE IS NOT ACCEPTABLE

Manufactured Meter Packs

Normally used as multiple meter installations for lease spaces, suites or apartments.

1. On those installations where BTU has authorized the use of a meter pack or bank, the top section of such equipment shall be located at the 5½-foot level. In no case shall the mounting of the electrical enclosure equipment be less than one foot above finished grade.
2. The meter pack shall have a factory means where BTU can install a BTU lock on the cover.
3. Each meter shall have a properly identified disconnect mounted directly below or beside the corresponding meter.

On multi-occupancy buildings, all meter socket lids and main service disconnect switches shall be plainly and permanently labeled and maintained by the owner as to indicate the building address and suite/apartment/condominium address served. Labels must be a ***minimum*** of 1.00” in Height and 2.50” in Width with engraved letters that are a ***minimum*** 1/4" high. The label shall identify the physical address, including the apartment, townhouse, office, suite, city and state.

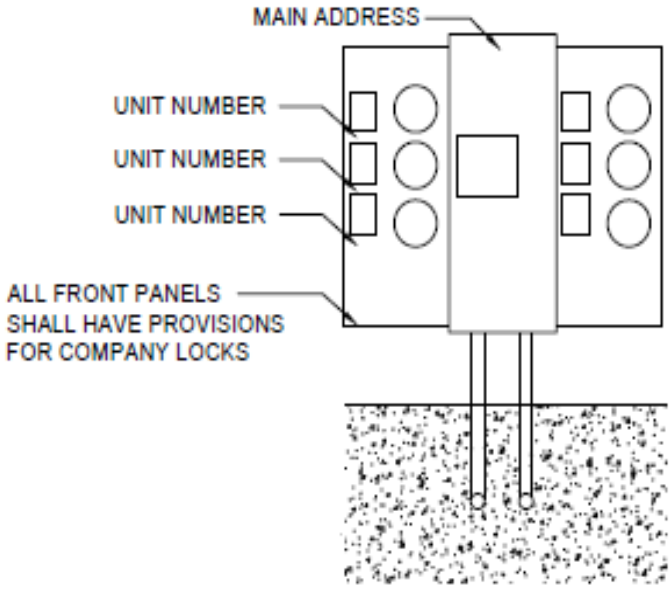

Meters Fed Through Wireways

1. Change of ownership for underground installations is defined to be at the Power Distribution Blocks (“PDB”). Customer to furnish, own, and maintain PDB (floating, insulated type for this application) and all conductors on the load side of the PDB.
2. Any required outage to be scheduled with the tenants for installation shall be the responsibility of the customer.
3. On multi-occupancy buildings, all meter sockets shall be plainly and permanently labeled and maintained by the owner so as to indicate the address. Labels must be a ***minimum*** of 1.00” in Height and 2.50” in Width with engraved letters that are a ***minimum*** 1/4" high. The label shall identify the physical address, including the apartment, townhouse, office, suite, city and state.
4. Water proof hubs are required on the top entry of the gutter.
5. Gutter must have two 3/8” factory or field installed weatherproof locking hasp that will accept a BTU lock. One (1) locking hasp is required every 3’on the gutter.
   DRILLING AS A LOCKING DEVICE IS NOT ACCEPTABLE.
6. Electrician to install riser and elbow per BTU requirements.
7. Gutter and meter socket shall be bonded with minimum #6 copper solid wire and bonded to the grounding electrode conductor.

On all 480-volt services, 200 Amp or less, unfused line side disconnects shall be installed ahead of the meter.

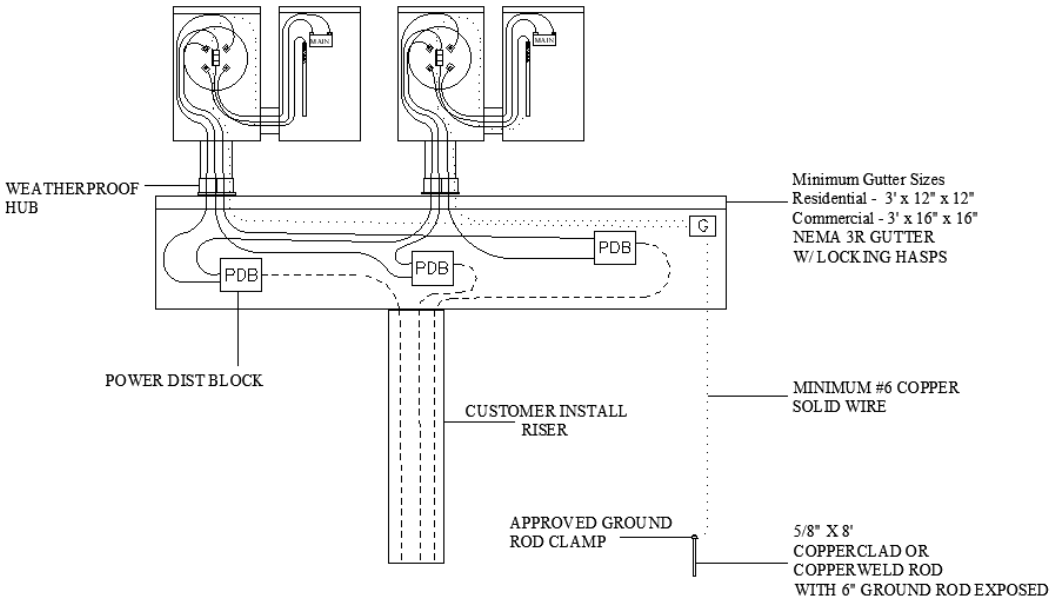

On multi-occupancy buildings, all meter socket lids and main service disconnect switches shall be plainly and permanently labeled and maintained by the owner as to indicate the building address and suite/apartment/condominium address served. Labels must be a ***minimum*** of 1.00” in Height and 2.50” in Width with engraved letters that are a ***minimum*** 1/4" high. The label shall identify the physical address, including the apartment, townhouse, office, suite, city and state.

SECTION 6: Clearances

General

In no case will BTU install a service or primary conductor which routes over a permanent structure. Poles, masts, risers, or bus ducts shall be of adequate height and strength to provide finished grade clearance for service drop conductors as required by the latest edition of the NEC and NESC.

Clearances from Buildings Where Service Mast Does Not Penetrate the Roof

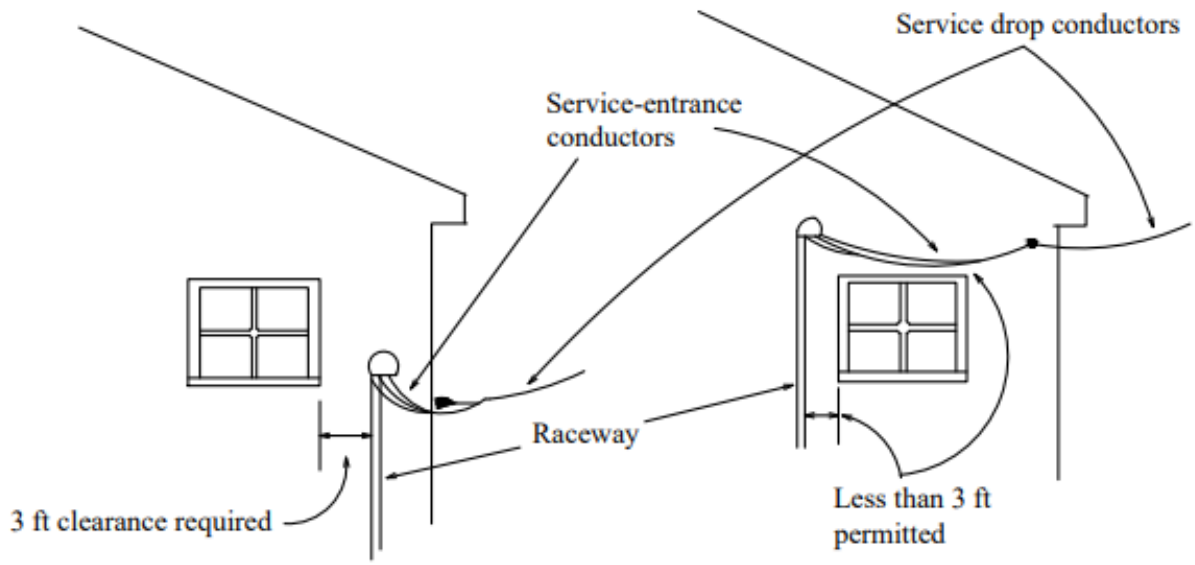

Clearance from building openings: Service conductors installed as open conductors or multi-conductor cable without a jacket shall have a clearance of not less than 3' from windows that are designed to be opened, doors, porches, balconies, ladders, stairs, fire escapes or similar locations.

Exception: Conductors run above the top level of a window shall be permitted to be less than the 3' requirement: Overhead service conductors shall not be installed beneath openings through which material may be moved, such as openings in farm and commercial buildings, and shall not be installed where they will obstruct entrance to these buildings.

Clearances Where Service Mast Penetrates the Roof

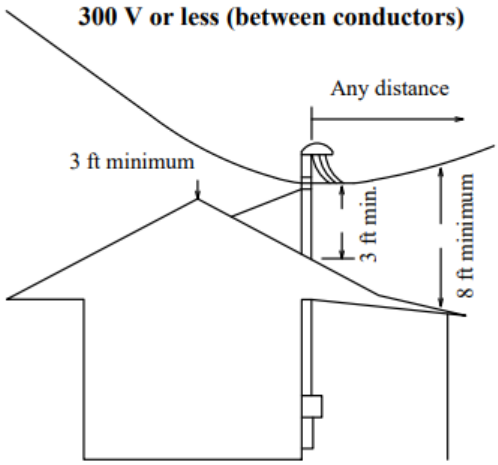

Exception No. 2 applies to steeply sloped roofs that are less likely to be walked on. These roofs have a slope of not less than 4 in. in 12 in. On such roofs, the vertical clearance of overhead conductors may be reduced from 8 ft to 3 ft. There are no restrictions on the length of the conductors over the roof or the horizontal distance over the roof.

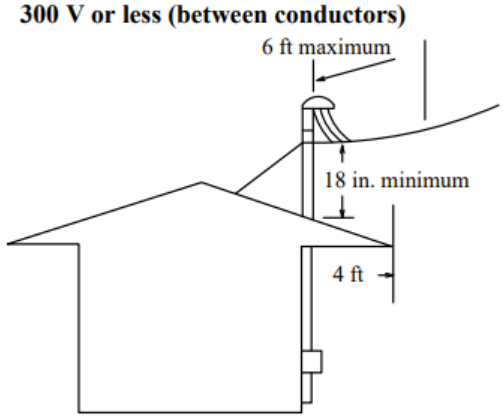

Exception No. 3 permits service conductor clearances to be reduced to 18 in. for through-the roof raceways passing through the overhanging portion, provided that not more than 6 ft of conductors pass over 4 ft of roof surface, measured horizontally. This applies to flat or sloped roofs that are easily walked on (less than 4 in. in 12 in.).

Service conductors shall not be readily accessible.

Note: Above Roofs: Conductors shall have a clearance of not less than 8' above the roof surface.

Exception 1: The area above a roof surface subject to pedestrian traffic shall have a vertical clearance from the roof surface in accordance with the clearance requirements.

Exception 2: Where the voltage between conductors does not exceed 300 volts and the roof has a slope of not less than 4" in 12", a reduction in clearance to 3' shall be permitted.

Exception 3: Where the voltage between conductors does not exceed 300 volts, a reduction in clearance above only the overhanging portion of the roof to not less than 18" shall be permitted if (1) not more than 6' of service drop conductors, 4' horizontally, pass above the roof overhang, and (2) they are terminated at a through-the-roof raceway of approved support.

Exception 4: The requirement for maintaining the vertical clearance 3' from the edge of the roof shall not apply to the final conductor span where the service drop is attached to the side of the building.

Clearances to Ground for Overhead Service Conductors

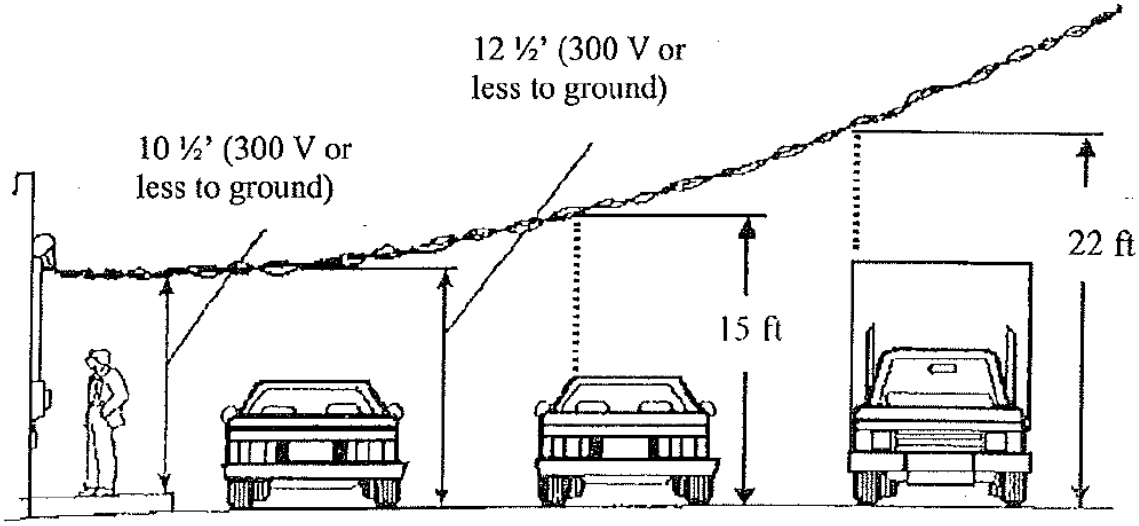

Service drop conductor, 300 volts or less to ground, shall have the following minimum clearances from final grade:

10½'- At the electric service entrance to buildings, at the lowest point of the drip loop of the building electric entrance and above areas or sidewalks accessible only to pedestrians. This is measured from final grade or other accessible surfaces.

12½'- Over residential property and driveways and those commercial areas not subject to truck traffic where the voltage does not exceed 300 volts to ground.

15'- Over residential property and driveways and those commercial areas not subject to truck traffic where the voltage exceeds 300 volts to ground.

22'- Over public streets, alleys, roads and parking areas subject to truck traffic, driveways on other than residential property and on other property subject to traffic by other vehicles such as farm equipment.

Pad Mounted Transformer Clearance

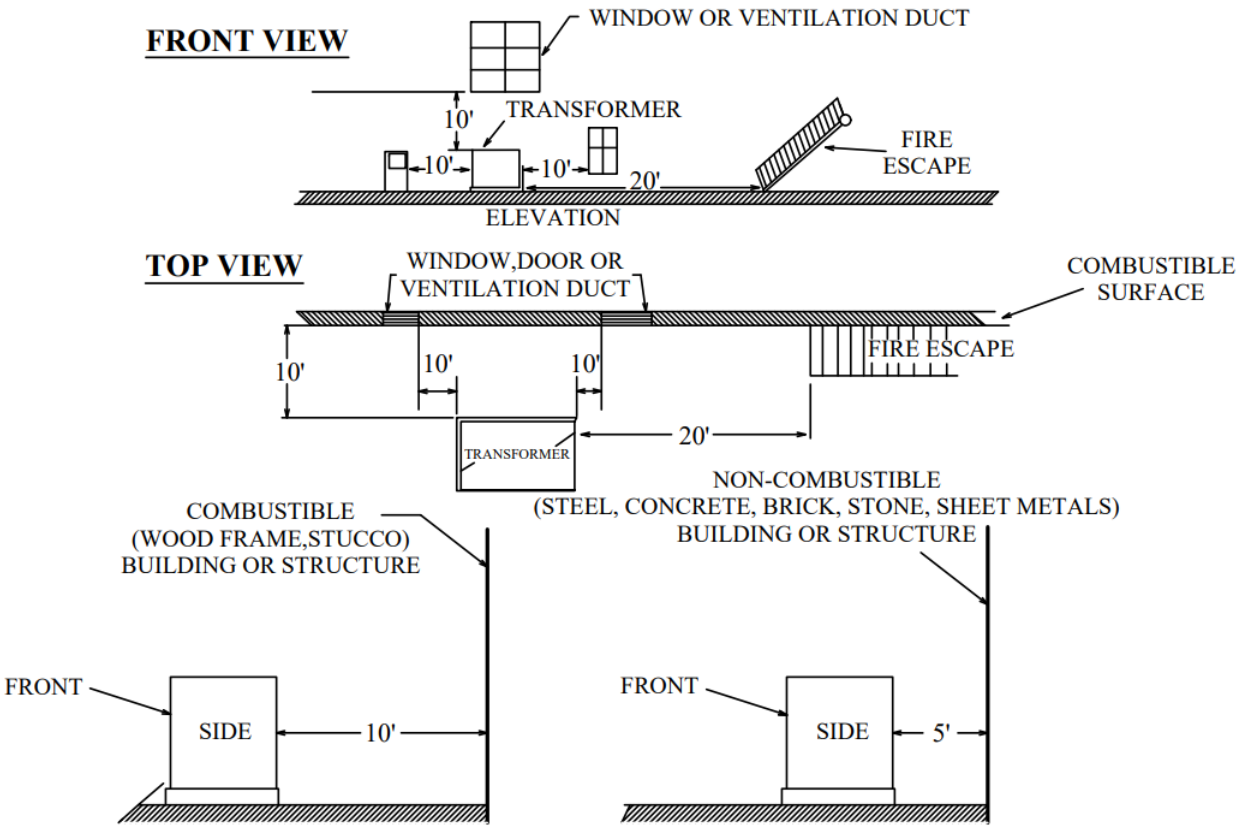

NOTES:

1. All dimensions shown are minimum dimensions **(NOT TO SCALE)**.

2. There should be no above ground obstructions, such as shrubs, air conditioners, gas meters, cable and phone upright pedestals within 5 feet of pad or within 12 feet of the equipment doors.

3. There should be no utilities or other obstructions passing under transformer pad.

4. Clearances from transformer to surface can be reduced to 3 feet if surface is 2-hour fire rated.

5. All clearances double for transformers >750 kVA.

6. Padmounted equipment, pedestals, and other above ground enclosures should be located not less than 5 feet from any fire hydrants, driveway or back of curb.

Swimming Pool Clearances

Clearance from overhead lines and structures: Swimming pools, fountains, hot tubs, wading pools, or other similar installations either for private or commercial use, located either above earth level as portable, storable or moveable, or located below earth level as permanent construction, must be placed so that existing service drop conductors or any other open overhead wiring is not directly overhead or over an area extending out ten (10) feet horizontally. Diving structures, observation stands, towers, or platforms must not be placed under any service drop or other overhead wiring.

Underground clearance: Underground wiring shall not be permitted under the pool or under an area extending (5) five feet horizontally from the inside wall of the pool. Premises wiring necessary to supply the pool equipment shall be allowed within this area.

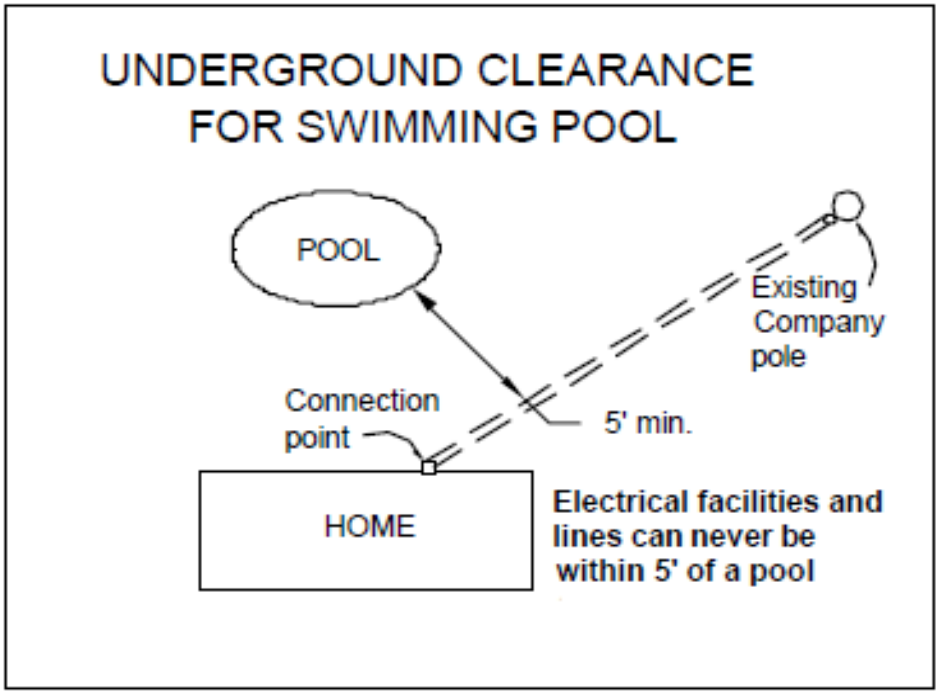

SECTION 7: Charts, Tables and BTU Specifications

Voltages Offered By BTU

OVERHEAD	UNDERGROUND
120/240V single-phase	240/120V single-phase
120/240V three-phase	
120/208V single-phase or three-phase	208/120V single-phase or three-phase
277/480V three-phase	480/277V three-phase

Maximum Padmount Transformer Sizes

The following is the maximum transformer size (kVA) offered by BTU. If the service point requires a larger transformer than what is offered, the service location will need to be split into smaller service points.

Voltage	kVA
240/120V single-phase	167
208/120V three-phase	1,000
480/277V three-phase	2,500

Color Identification Codes for Conductors at Service Entrance

120V Single-Phase

Neutral - White	Leg “A” – Black	Leg “B” - Red

120/240V Three-Phase Delta

Neutral - White	Leg “A” - Black	Leg “B” - Orange	Leg “C” - Blue

The Hi-Leg (Orange) is to be located on the right-hand lug of the meter socket and the middle lug (“B”-phase) of the electrical panel or disconnect.

120/208V Three-Phase Wye

Neutral - White	Leg “A” - Black	Leg “B” - Red	Leg “C” - Blue

277/480V Three-Phase Wye

Neutral - White	Leg “A” - Brown	Leg “B” - Orange	Leg “C” - Yellow

Service Entrance Ratings and Conduit Charts for Underground Service Risers

Single-Phase Commercial – 3-Wire System

Service Rating	Riser Conduit Size and Type	Riser Elbow Size and Type	Maximum Wire Service Length
200 Amp	3” Rigid, IMC or Sch 80 PVC	18” Radius PVC	220’
320 Amp	3” Rigid, IMC or Sch 80 PVC	18” Radius PVC	120’
400 Amp	4” Rigid, IMC or Sch 80 PVC	36” Radius PVC	100’

Three-Phase Commercial – 4-Wire System

Service Rating	Riser Conduit Size and Type	Riser Elbow Size and Type	Maximum Wire Service Length
200 Amp	3” Rigid, IMC or Sch 80 PVC	18” Radius PVC	75’
400 Amp	4” Rigid, IMC or Sch 80 PVC	36” Radius PVC	75’

Single-Phase Residential – 3-Wire System

Service Rating	Riser Conduit Size and Type	Riser Elbow Size and Type	Maximum Wire Service Length
200 Amp	3” Rigid, IMC or Sch 40 PVC	18” Radius PVC	220’
320 Amp	3” Rigid, IMC or Sch 40 PVC	18” Radius PVC	120’

1. Contact BTU Line Design for all service ratings over 400 amps.

2. All risers shall extend at least 6” below finished grade.

3. No more than three (3) 90° elbows may be installed in any single service run from the power source to the metering point. Adding the 3rd elbow will reduce the maximum wire service lengths by 25%. **Back-to-Back 90°- degree elbows are prohibited.**

4. Maximum Wire Service Length is the linear distance from the meter socket to the transformer connection.

5. Prior to service being extended or a determination of CIAC amount for any commercial service, an electric load analysis must be provided to Line Design with enough detail to adequately size BTU’s electric facilities.

Service Entrance Ratings, Wire and Conduit Charts for Overhead Service Risers

Service Size	Customer Service Conductor	Service Riser Size

Single-Phase Commercial – Three Wire System

100 amp	#3 Copper or #1 Alum	2”
125 amp	#1 Copper or 2/0 Alum	2”
150 amp	1/0 Copper or 3/0 Alum	2”
200 amp	3/0 Copper or 250 Alum	2”
320 amp	400 Copper or 600 Alum	3”
400 amp	600 Copper or 900 Alum	4”

Three-Phase Commercial – Four Wire System

100 amp	#3 Copper or #1 Alum	2”
125 amp	#1 Copper or 2/0 Alum	2”
150 amp	1/0 Copper or 3/0 Alum	2”
200 amp	3/0 Copper or 600 Alum	3”
400 amp	600 Copper or 900 Alum	4”

Single-Phase Residential – Three Wire System

100 amp	#4 Copper or #2 Alum	2”
125 amp	#2 Copper or 1/0 Alum	2”
150 amp	1/0 Copper or 2/0 Alum	2”
200 amp	2/0 Copper or 4/0 Alum	2”
320 amp	250 Copper or 350 Alum	3”
400 amp	400 Copper or 600 Alum	4”

***** For all services over 400 amps contact BTU Line Design.**

***** All risers must be either rigid metal or IMC. PVC will not be accepted in overhead applications.**

Maximum Overhead Span Lengths-Service Cable

(Spans greater than lengths shown will require a guy.)

CABLE SIZE	SERVICE SPAN (Feet)
6 DSC	150 (> 150’ will require a lift pole)
6 TSC QSC	150 (> 150’ will require a lift pole)
2 TSC QSC	50’
1/0 TSC QSC	50’
4/0 TSC QSC	25’
350 MCM QSC	25’
500 MCM QSC	25’
2 – 4/0 QSC	25’
2 - 350 MCM QSC	25’
2 - 500 MCM QSC	25’ (> 50’ will require a lift pole)

*****A lift pole will be required for all services greater than 75 ft. (except where noted).**

*****In all cases, NESC clearances must be met.**

Secondary Conduit Installation

Joint Trench with Other Communication Utilities

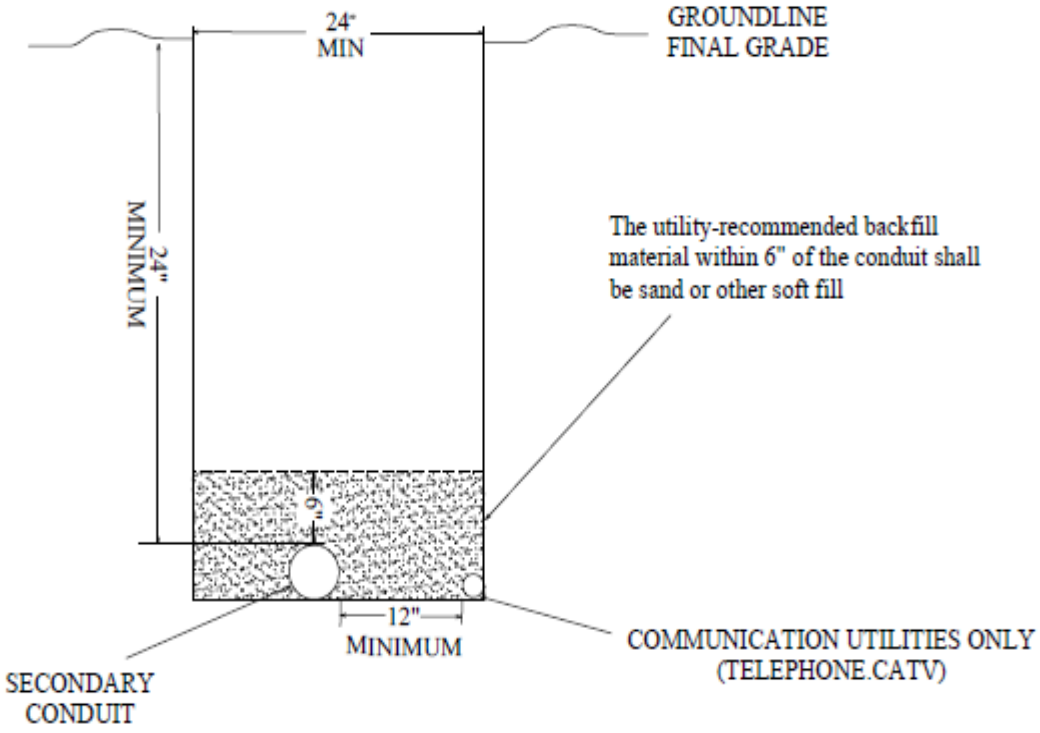

Distance from center of trench to property line or easement to be coordinated between BTU and developer prior to conduit installation.

Primary & Secondary Conduit Installation

Joint Trench with Other Communication Utilities

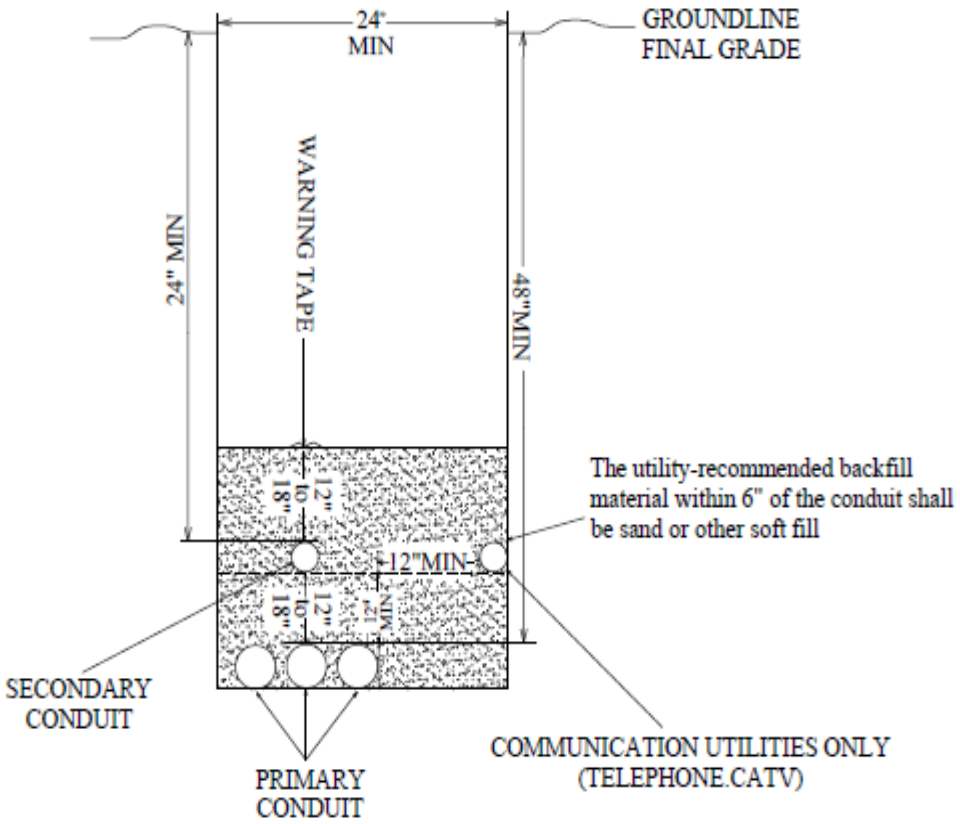

Distance from center of trench to property line or easement to be coordinated between BTU and developer prior to conduit installation.

SECTION 8: Motors and Controllers

General

Appliances and apparatus equipped with motors that provide the Customer with satisfactory operation of the appliance shall at the same time avoid interference with service to other Customers. Motors may cause voltage disturbances resulting in flickering lights, television interference, and other objectionable conditions. BTU uses IEEE Standard 141-1993 as a guideline for the level of allowable voltage fluctuation. Customers are not allowed to start any load on the BTU's system that causes voltage fluctuations that will be detrimental to the operation of BTU's distribution and/or transmission system, or to the service of any of BTU's Customers. If the starting of a motor installation and the resulting voltage disturbance causes, or is expected to cause, detrimental service to other Customers, reduced voltage starters or other suitable means must be employed by the Customer and at the Customer's expense, to limit the voltage fluctuations to a tolerable level. Customers are responsible for correcting unacceptable voltage fluctuation problems in a timely manner when notified by BTU. If BTU determines that an engineering study is required to ensure motor starting characteristics will not adversely affect the operation of BTU's distribution or transmission system, the Customer will be responsible for all fees associated with the study

All motors connected to BTU's lines shall bear a manufacturer's nameplate indicating horsepower, continuous or intermittent duty, speed, voltage and current ratings. When a motor is rewound to produce a change in the original design, a new nameplate shall be attached indicating the motor's new characteristics. All new motor installations shall be designed to operate on the type of service provided by BTU. The Line Design Department will advise the Customer as to the type of service available at the location where the motor is to be used. Inquiry should be made before purchasing or installing the motor.

Before any large motors or special apparatus are installed, it is necessary to consult BTU regarding the character and adequacy of the available service and the manner in which the equipment may be connected.

Motor Starting Limitations

The starting of a motor on an electric circuit causes a momentary fluctuation of the circuit voltage each time the motor starts. Where this effect is pronounced, a visual disturbance or lighting flicker may be observed by the Customer or other Customers served from the same system. In extreme cases, the motor itself may have difficulty in starting. To minimize this problem, it is necessary to set limits upon the starting current permitted in any motor installation. These limits are designed to cover typical cases, and BTU gives no warranty that particular conditions may not later require changes.

Typical motor starting limitations based on motor start cycles not exceeding four starts per hour, are listed in Tables I - IV below. Separate limitations are prescribed for conventional motorized equipment rated in BTU's per hour. Cases not covered therein should be referred to BTU Line Design.

All motors connected for operation at 120 or 240 volts which do not exceed the locked rotor starting current limitations as stated in Tables I and II are normally started four times per hour or less may be connected directly to BTU's supply lines.

Motors that do not comply with the locked rotor starting current limitations or not covered therein shall be discussed with BTU prior to purchase and installation, as it may be necessary for the Customer to provide means to reduce starting currents and/or voltage fluctuations. Specific inrush limitations will be supplied and will vary with the size, type, demand and location of service.

When starting devices are used, the total current taken by the motor is not restricted but may have to be built up in steps, each of which does not exceed the maximum allowable motor starting current as stated in Tables I-IV. When a step type starter is used, an appreciable time delay must be allowed on each step.

When motors are started as a group instead of individually, the starting current limitations apply to the group and not to the individual motors.

Starting Current Limits for Single-Phase Motors
BTU must be notified of any single-phase motor installation totaling 3 HP or more, as it may be necessary in such cases to effect changes in the supply system to serve the additional load.

All single-phase motor driven equipment rated larger than 1 HP must be connected for operation at 240 volts unless agreed upon with BTU ahead of time as part of an approved three-phase installation.

Tables I and II list the maximum starting currents permitted at 120 or 240 volts single-phase for conventional motorized equipment rated in horsepower and for air conditioning or heat pump equipment rated in BTU's per hour. These limits are permitted only for motors normally expected to start not more than four times per hour. For convenience, the tables include the NEMA Code designation of motors which will start without exceeding the prescribed starting current limits and without requiring auxiliary starting devices.

Table I Motor Starting Limitations Single-phase Equipment with Motors Rated In Horsepower

Operating Voltage	Motor Size (HP)	Maximum Starting Current (A)	NEMA Code Letter
120	½	50	A to M
120	¾	50	A to J
120	1	50	A to G
240	½	60	A to S
240	¾	60	A to P
240	1	60	A to H
240	2	60	A to G
240	3	80	A to B
240	5	120	A
	In excess of 5HP		(see note)

Table II Single-phase Air Conditioning or Heat Pump Equipment

Operating Voltage	Capacity (BTU/Hr.)	Maximum Starting Current (A)
120		50
240	20,000 or less	60
240	25,000	75
240	30,000	90
240	35,000	105
240	40,000	120
240	In excess of 40,000	120 (see note below)

Note: Motors in these sizes generally require an auxiliary starting device to meet the starting current limits. BTU should be consulted to obtain allowable inrush limitations which will vary with service size and location.

Starting Current Limits for Three-phase Motors

Tables III and IV list the maximum starting current permitted at 240 volts, three -phase for conventional motorized equipment rated in horsepower and for air conditioning or heat pumping equipment rated in BTU's per hour, on the basis of not more than four starts per hour.

A Customer, upon proper notification to BTU, may connect to BTU's supply lines, any motor which conforms to the starting current limits specified in these tables, with or without the use of reduced voltage starting equipment; provided that the estimated or recorded electrical demand at the point of service, exclusive of the motor being added, meet the Minimum Demand Required, shown in the left-hand column.

In the case of motor-driven equipment rated greater than 20 HP or 225,000 BTU's per hour, BTU should be consulted. In cases of motor driven equipment rated less than 20 HP or 225,000 BTU's per hour, if the equipment in question cannot meet the starting current limits indicated in the Tables or if the Customer's existing load does not satisfy the minimum demand requirements. BTU will then determine whether specific conditions at the point of service will permit a greater starting current to be drawn without adverse effect on the electric service to other Customers.

The starting currents permitted in the Tables are based on motors carrying a nameplate voltage rating of 220 volts. Motors rated at 200 volts, or at 208 volts, will actually draw a higher starting current than indicated on their name plates when they are supplied at a higher voltage, for example, 230 volts. However, for the purpose of this manual, it may be assumed that the actual starting currents of motors rated at 200 or 208 volts will be the same as the starting current (*locked rotor current*) indicated on the nameplate.

Table III Motor Starting Limitations Three-Phase Equipment with Motors Rated in Horsepower

Minimum Demand Required (kW)	Motor Size (HP)	Maximum Starting Current (A)
No Minimum Demand Required	2 or less	50
10	3	64
10	5	92
10	7	127
20	10	162
20	15	232
30	20	300

Table IV Three-Phase Air Conditioning or Heat Pump Equipment

Minimum Demand Required (kW)	Capacity (BTU/Hr.)	Maximum Starting Current (A)
No minimum demand required	20,000 or less	50
10	30,000	75
10	40,000	100
10	50,000	125
10	60,000	135
10	75,000	150
20	100,000	175
20	150,000	225
30	200,000	275
30	225,000	300

Motor Starting and Control Equipment
All motors and motor control equipment shall be installed in accordance with the NEC Article 430 and all other applicable local, state or federal codes.

Motor Starters/Controllers of the Silicon Controlled Rectifier (SCR) type as well as other similar devices can create harmonic disturbances that may have detrimental effects on BTU's electric system and/or service to BTU Customers. Disturbances of this nature attributable to the use of these type devices shall be corrected without undue delay at the Customer's expense and to the satisfaction of BTU.

Critical Service Motor Operation
Where continuous operation of a motor is essential, the no-voltage release should have a time delay relay, which will prevent the opening of the circuit in the event of momentary voltage fluctuation. BTU will attempt to assist the Customer in selection of an automatic starting device and any other device to hold motors on line during voltage disturbances.

Motor Protection
It is recommended that all motors installed on BTU's electrical system incorporate adequate motor protection. Some protection types to be considered are discussed below. This is not an exhaustive list. BTU will not be responsible in any way for damage to Customer's equipment due to the failure of the Customer to provide adequate motor protection.

Phase Reversal Protection
Reverse phase relays are required on three-phase elevator services as discussed in the National Electric Code (NEC) Article 620. It is strongly recommended that the Customer install them where accidental reversal of motor rotation would cause serious inconvenience, damage, or delay. BTU shall not be responsible for any damages caused by phase reversal.

Over Current Protection
The NEC requires that adequate over current protection be provided in each phase on all motor installations. The Customer should ensure complete protection against "single-phasing" on all three-phase motors. Over current protection in two phases is not adequate protection for this condition. Single phasing on the distribution system is necessary at times for fault clearing and switching and occurs occasionally due to unforeseen circumstances. Motor protection is the responsibility of the Customer. BTU will not be responsible in any way for damage to Customer's equipment due to the failure of the Customer to provide adequate over current protection.

Partial or Complete Loss of One or More Phases
BTU protects certain sections of its three-phase distribution system with single-phase devices (e.g., fuses). For this reason, it is recommended that all Customers with three-phase motors follow the NEC Article 430 III pertaining to motor protection. The Code requires motors to be provided with three current overload units, one in each phase. In addition, it is also recommended that all polyphase motor installations be equipped with an automatic disconnecting device (sensing voltage loss) as added protection for 'single phasing conditions' (partial or complete loss of one or more phases). Partial or complete loss of one or more phases may be from failure of the Customer's equipment serving the motor or from inherent partial or complete loss of one or more phases of BTU's electric distribution equipment. BTU shall not be held responsible or liable for damage to the Customer's installation due to such causes in the inherent operation of BTU's distribution system.

Under Voltage Protection
All motors and special apparatus should be equipped with suitable undervoltage tripping devices to prevent sustained under voltage operation and equipment damage. BTU will not be responsible in any way for damage to Customer's equipment due to the failure of the Customer to provide adequate under voltage protection.

SECTION 9: Power Delivery

Utility Grade Power vs. Premium Power

"Utility grade power" is electricity delivered by a utility in a well-established, industry accepted manner allowing for satisfactory performance of conventional lighting and motor loads. Utility systems providing electric power are designed to minimize costs while maintaining reasonable levels of reliability.

Utility grade power also refers to the power supplied inside Customer-owned facilities, which contains internally created power quality disturbances and problems. In fact, studies done by the Electric Power Research Institute (EPRI) indicate that four out of five power quality problems are due to faulty wiring and grounding inside Customer-owned facilities.

In contrast, "premium power" is electricity delivered to sensitive electronic loads requiring higher reliability and power quality than conventional loads. Premium power can be customized to match the operating requirements of the equipment in question and is commonly referred to as "computer-grade" power. Ideally, premium power will consist of continuous, regulated voltage free from disturbances.

Standards defining the quality of utility grade power include the evenness of the average voltage, frequency, and the reliability. BTU follows national guidelines defined by the American National Standards Institute in designing and operating the electric utility system for voltage and frequency.

In general, BTU cannot provide premium power. To obtain this level of service, Customers must enhance or upgrade their existing electrical facilities by installing power conditioners and applying other power quality solutions specifically selected to meet their requirements.

It is the Customer's responsibility to install the necessary protective equipment to limit adverse effects on equipment from voltage fluctuations, waveform distortion and single-phasing events.

Power Quality

While BTU cannot deliver premium power to its Customers, BTU does attempt to maintain service voltages within the ranges recommended by the American National Standard Institute (ANSI) in its standard C84.1, ***American National Standard for Electric Power Systems and Equipment - Voltage Ratings (60 Hz)***.

ANSI C84.1 was prepared by the National Electrical Manufacturers Association (NEMA) with participation by the Edison Electric Institute (EEI) and others. These voltage ranges apply to steady-state voltages, and do not apply to momentary voltage fluctuations, caused by switching operations, motor starting, fluctuating loads, and other normally occurring electrical operations.

ANSI C84.1 categorizes each voltage range for two locations: service and utilization. Service voltage is measured at the point of delivery (typically at the Customer’s electric meter) while utilization voltage is measured at the terminals of the Customer’s utilizing equipment. The difference between service and utilization voltage allows for voltage drop in facility wiring between the point of utility delivery and the utilization equipment. The National Electrical Code (NEC) covers this in greater detail in Articles 210, 215, and 310.

BTU strives to design and operate its electric system to operate within ±5% of nominal voltage. The occurrence of service voltage excursions outside Range A (See table below) for long periods is infrequent, but may occur due to unusual operating conditions. When abnormal conditions occur (such as the loss of a major transmission line, generator, etc.), corrective measures are taken by BTU within a reasonable time to improve voltages to meet Range A guidelines. However, it is the responsibility of the Customer to design their electrical system to ensure the utilization voltage guidelines in ANSI C84.1 are met.

The following table shows the acceptable voltage range as defined by ANSI C84.1 for BTU's common service voltages:

Nominal Voltage	Range A Minimum	Range A Maximum
240/120	228/114V	252/126V
208Y/120	197/114V	218/126V
480Y/277	456/263V	504/291V

Besides variations in the steady state voltage, momentary voltage sags and over voltages occur on all electric utility systems. These short duration voltage variations can adversely affect electric equipment, particularly variable speed motor drives, computers, programmable logic controls, and motor contactors. It may be especially noticeable using incandescent lighting. Normally-occurring voltage sags and overvoltage transients were not a major concern before the wide-spread use of electronic equipment. The increased use of sophisticated electronic equipment has made it necessary for utility Customers to take proactive steps to mitigate the effect of voltage transients on their equipment.

Over voltage transients can occur during the normal operation of an electric system, such as when capacitor banks are switched on, when circuit breakers operate, or when lightning hits a feeder. Transient voltage surge protection should be installed by the utility Customer to help prevent electrical equipment from being damaged, or failing to operate properly. These over voltage transients are very short events (typically occurring for fractions of a second), and yet they can cause electrical equipment to malfunction. As mentioned before, our society's increased usage of sophisticated electronic equipment has made it necessary for utility Customers to take proactive steps to mitigate the effect of over voltage transients on their equipment.

Frequently Called Numbers

Job Scheduling Information……..(979) 821-5940

Line Design/Inspections.....(979) 821-5770

Customer Service .....(979) 821-5700

New Service Applications (Fax).....(979) 821-5781

Electric Dispatch.....(979) 822-3777

Report a Streetlight Outage.....www.btutilities.com

Temporary Construction Pole (T-pole) Connections.....(979) 821-5770

Warehouse (meter sockets).....(979) 821-5933

24-hour Outage/Emergency Hotline Phone ..... (979) 822-3777

City of Bryan Planning and Development……..... (979) 209-5010

City of College Station Planning and Development…… (979) 764-3570

Texas 811 (Line Locates) …….....(800) 344-8377

Brazos County (New Address Request)……...(979) 779-0911

City of Bryan (New Address Request)…….....(979) 209-5030

Burleson County (New Address Request) …..……(979) 567-2007

BTU Warehouse (customer material pickup) ...……...…(979) 821-5933

BRYAN TEXAS UTILITIES

Physical Address	Mailing Address
2205 Fountain Ave. Suite 100 Bryan, TX 77803	PO Box 1000 Bryan, TX 77805

Contact:

BTUNewConstruction@btutilities.com

Line Design Telephone .....(979) 821-5770

http://www.btutilities.com